LOADING TECHNOLOGY

NEW. Energy-saving dock leveller HTL 2 ISO, controls with BlueControl as well as wheel-blocking system MWB2 for increased workplace safety

HÖRMANN

46
47
48
49

4

Good reasons
to try Hörmann

22

Application areas

36

Versions
Accessories
Technology

Brand quality for industrial construction

The family-owned company Hörmann offers all important construction components for building and renovating projects from a single source. We manufacture in highly specialised factories using state-of-the-art production technologies. Our employees work intensively on new products, continual further developments and improvements to details. The results are patents and unique products on the market.

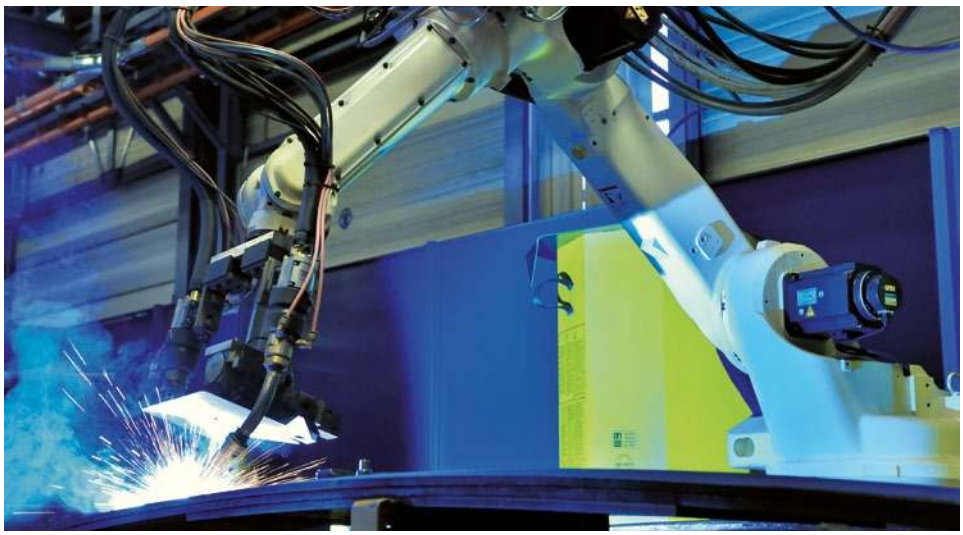

WE THINK AND ACT GREEN. As a family business, we are very conscious of our responsibility to future generations. The Hörmann climate protection strategy aims to reduce and avoid CO_2 emissions. We cover 100% of our electrical power needs at all European production locations with purchased green electricity. We are also investing in a clean future with other measures such as the use of recycled paper, CO_2-neutral postal shipping and the recycling of transport packaging to save more than 75,000 tons of CO_2 every year. We work with ClimatePartner to offset the emissions that we do generate by supporting certified climate protection projects. In particular, we offset all CO_2 emissions produced in manufacture of products for residential construction as standard. Products for construction projects are also available as CO_2-neutral versions upon customer request.

You can find further information at
www.hoermann.com/sustainability

ClimatePartner certified product
climate-id.com/XNEBKC

CO_2
measure
reduce
contribute

ClimatePartner certified product
climate-id.com/FYZNUF

CO_2
measure
reduce
contribute

Sustainable planning for trend-setting construction

Experienced specialists within our customer-oriented sales organisation accompany you from the planning stage, through technical clarification up to the final building inspection. Complete working documentation, such as, e.g. data sheets, are always accessible and up-to-date at www.hoermann.de

SUSTAINABILITY DOCUMENTED. Hörmann has received confirmation of sustainability through an Environmental Product Declaration (EPD) in accordance with ISO 14025 from the Institut für Fenstertechnik (ift – Institute of window technology) in Rosenheim, Germany. This EPD was created based on EN ISO 14025:2011 and EN 15804:2012. In addition, the general guidelines for the preparation of type III Environmental Product Declarations apply. The declaration is based on the PCR document “Doors” PCRTT-1.1:2011.

PRODUCT PORTAL FOR ARCHITECTS AND PLANNERS. Clearly structured navigation and a search function provide faster access to texts for invitations to tender, technical data, certificates, CAD drawings and much more. In addition, BIM data can be provided for many products for the Building Information Modelling process, enabling efficient planning, drafting, construction and management of buildings. Photos and photo-realistic presentations provide additional information on many products.

PRODUCTS
FOR BIM

We are a member of the professional association for digital building products in the Federal Association of Building Systems e.V.

You can find further information at
www.hormann.co.uk/architects-service

ENERGY SAVINGS COMPASS. Hörmann’s energy savings compass shows how industrial door systems and loading technology are planned with energy efficiency and sustainability in mind. An integrated calculation module estimates the amortisation period for door and loading technology systems. The energy savings compass is available as a web-based interface for PC / Mac and mobile end devices.

Easy to fit and service

Hörmann controls for industrial doors and dock levellers can be combined very well with compact systems thanks to standardised housing sizes and the same cable sets. Depending on the equipment, needs-based interfaces and intelligent accessories support installation, adjustment work and troubleshooting procedures, both on-site and via remote access.

Round-the-clock service

FAST SERVICE. Our teams of highly qualified specialists travel all around Germany. Our network of over 500 service technicians guarantees speed and flexibility. We are available around the clock and our customers can rely on us. But Hörmann also offers consulting, maintenance and repairs in many other countries.

10-year guaranteed availability

HÖRMANN SPARE PARTS. Dock levellers, controls, loading houses, dock shelters and accessories come with a guaranteed availability of 10 years.

Easy to fit

INTELLIGENT DETAILS FOR OPTIMUM CONNECTION. Reliable fixing of the dock levellers in the building structure is especially important for safety and a basic requirement for a lasting function. Where pit models are used, cut-outs indicate the precise position of the optimum welding seam. The fitting by casting process is supported by intelligent fitting details such as screw-in adjustment angles, extremely sturdy flat anchors and air vents in the edge bracket.

➔ For further information, see from page 62.

BlueControl

SMART INITIAL START-UP. Initial start-up, service and maintenance of dock levellers with controls 560 T, 560 S, 560 V is easy and convenient with the BlueControl app.

➔ For further information, see from page 58.

Effective thermal insulation

Matched energy-efficient solutions at the loading site offer tremendous energy-saving potential. With interior solutions, the aim is to effectively reduce heat losses via the steel structure of the dock levellers. Insulation below the dock leveller and doors running in front of the dock leveller are now an indispensable part of temperature-controlled buildings. With loading houses, the entire loading site is positioned in front of the building. The thermally insulated external door provides an optimum building closure outside of loading times.

INSULATED DOOR SOLUTIONS. Well-insulated industrial doors are essential in temperature-controlled buildings to keep energy losses to a minimum. Doors with thermal break and ThermoFrame also improve thermal insulation. High-quality seals on the side frames, lintel and floor as standard reduce thermal losses. Guiding the door in front of the dock leveller set back in the building to an insulation panel effectively prevents in-house solutions from losing energy outside of loading times.

ENERGY-EFFICIENT CONCEPTS. Selecting the right components can reduce energy costs in new builds and renovations. We advise you how to get the best return on your investment, e.g. in an inflatable dock seal, an insulated dock leveller or thermally insulated loading house.

➔ For further information, see from page 37.

For further information, see the “Industrial sectional doors” brochure.

Insulated dock levellers

The HTL2 ISO efficiently reduces energy losses via the dock leveller (transmission and ventilation losses). Equipped with 50 mm thick insulation panels underneath the platform and a patented, moving insulation panel underneath the lip, this dock leveller improves insulation in the home position 1 and during loading (working position) 2 by around 55%.

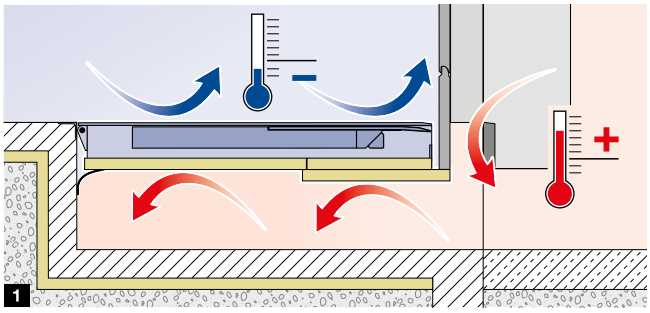

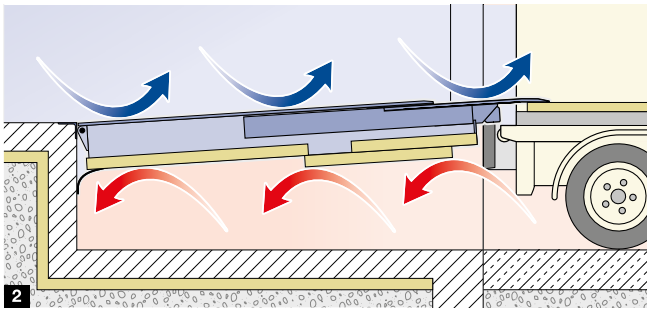

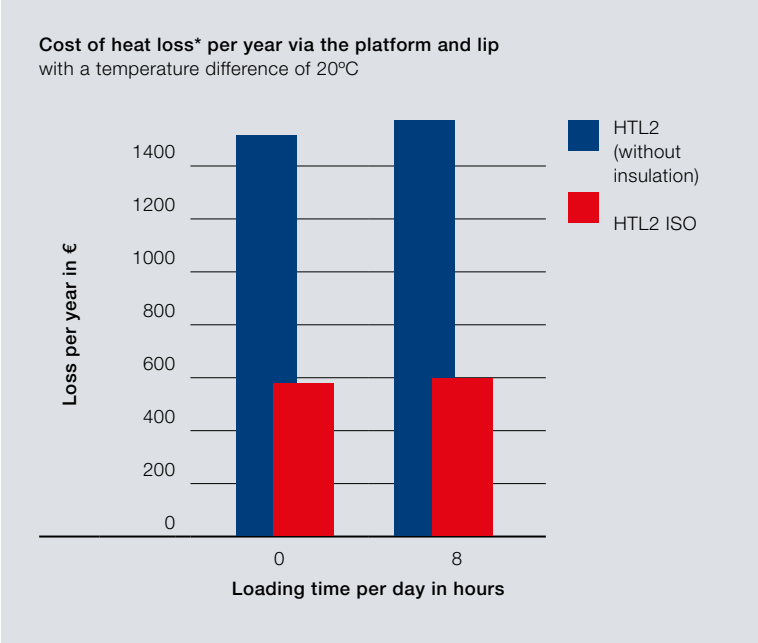

Only from Hörmann

Moving insulation panel underneath the lip

Approx. 55% better insulation

ADVANTAGES OVER UNINSULATED DOCK LEVELLERS.

- Improved maintenance of the temperature in the building, approx. 55% better thermal insulation
- Even with high loading frequency, only minimal increase in heating costs with increasing loading time (see graph on cost of heat loss)
- Energy cost saving of approx. 800 € per year and improved sustainability

➔ For further information, see from page 48.

Tip

Plan with the energy savings compass. Further information can be found on page 7.

* Determined under test conditions with exclusive consideration of the dock leveller, without assumptions regarding peripheral factors such as the door, number of loading sites, etc. The effect of the seals underneath the platform is not taken into account. Therefore, the thermal protection effect is even higher in practice.

Long-lasting, reliable construction

The S 235 moulded steel platform of the dock leveller is made of a single piece up to a size of 2000 × 3000 mm. With wider and longer dock levellers, a carefully made welding seam joins the plates, resulting in a continuously sturdy platform. The number and design of the beams prevent deformation, caused by lane grooves for example, beyond the degree required by EN 1398.

Static calculation in accordance with EN 1990

All versions CE-compliant

TESTED AND CERTIFIED. Hörmann loading houses meet all requirements regarding stability and safety with their narrow design both inside and outside. The LHP 2 version with double-skinned panels is suitable as standard for roof loads up to 3 kN/m². The frame construction is dimensioned according to Eurocode “Basis of structural design” as well as Eurocode 1 and 3 and certified according to EN 1090. With standard-compliant components, CE label and online declaration of performance, CE conformity can be verified at any time.

ROBUST AND FLEXIBLE. Made of galvanised steel, the frame constructions of the flap dock shelters are extremely robust and flexible at the same time. High-quality tarpaulin material ensures a good seal to the vehicle. The bar-free DDF10, with foam-filled side cushions that deflect without damage when the lorry approaches at an angle, is especially durable. The advantage of inflatable dock seals is that the cushions have no contact with the vehicle when docking. This also adds to the longevity.

Fast and safe loading and unloading

Efficient loading is only possible when the load is moved in or out of the lorry in a single horizontal movement. Hörmann dock levellers with particularly flat transitions are the ideal solution to compensate for the difference in height between different lorry loading surfaces and the loading platform. The loading process is much faster and damage to the transported goods is avoided.

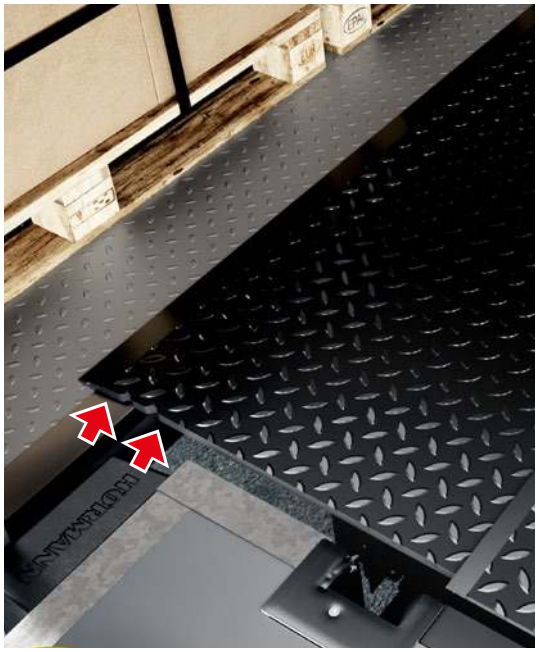

SIMPLE OPERATION FOR PRECISE POSITIONING.

Telescopic lip dock levellers can be extended and retracted in a targeted manner via separate control buttons, and can be precisely placed on the loading surface under control. In addition, notches on the outside indicate the correct contact area on the loading surface. The continuous and precise extending and lowering of the telescopic lip allows simple and safe unloading, even of fully loaded lorries. This way, even pallets that are situated at the end of the vehicle's loading surface and thus only provide limited telescopic lip space, can be loaded.

VEHICLES SECURED TO PREVENT ROLLING AWAY.

Even when the lorry is well docked, its position can still change during the loading process, e.g. due to the forklift braking when entering and exiting. The new wheel-blocking system MWB2 effectively ensures that the lorry remains as intended in the safe docking position during the loading process.

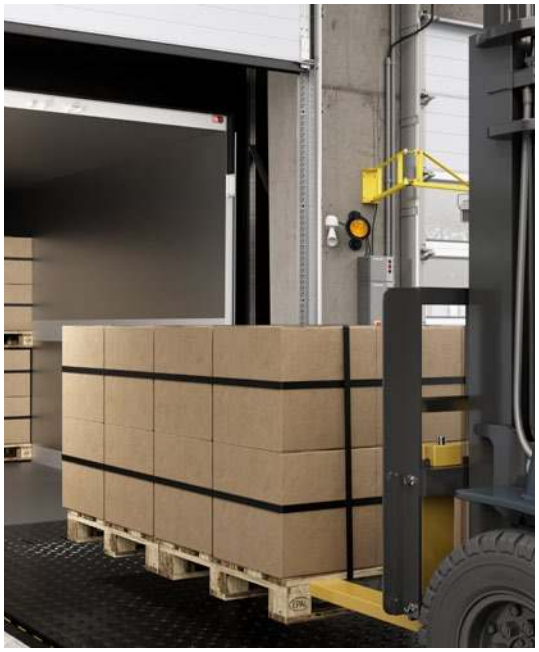

SAFETY THROUGH LIGHT AND LIGHT SIGNALS.

Lack of visual contact and rapid movement sequences at the loading site make it difficult for the lorry driver and warehouse personnel to communicate. Interior and exterior warning lights provide visual information, e.g. that the lorry has reached the docking position and is secured. Docklights with a swivel arm ensure a well-lit loading area, both day and night.

Energy-efficient and sustainable loading with the DOBO system

With Hörmann DOBO docking systems (docking before opening), the hall door and vehicle doors are only opened when it is really necessary. The lorry docks with its doors closed. The doors are positioned inside the hall once the hall door has opened. From the docking assistant, the dock shelter, and the dock leveller to the movable buffers, all components are optimally matched to each other. DOBO systems can be implemented particularly easily with loading houses.

The DOBO system allows the lorry to dock with its doors closed and then open and position them inside the hall once the hall door has opened.

SPEED. The DOBO system saves approx. 5 minutes per lorry during docking, as the driver does not have to get out to open the doors beforehand. In addition, swap containers can be docked in the evening and unloaded the following morning.

WORKPLACE SAFETY. Safe docking without having to leave the vehicle minimises the risk of accidents in the danger zone between the vehicle and the ramp.

ANTI-THEFT PROTECTION. The hall door and vehicle doors can remain closed until the actual loading process is started.

CUSTOMS CLEARANCE PROCEDURE. The lorry can dock as soon as it reaches the loading site, since the seal can be released from inside.

ENERGY COST SAVINGS. A DOBO loading site can easily be implemented with an HTL2 ISO dock leveller, saving energy and hence money.

CLOSED COLD CHAINS. The inflatable dock seal reduces temperature exchange and ensures hygienic transport.

➔ For further information, see from page 70.

Building and vehicle protection

Damage to the vehicle and the ramp can be avoided only through careful and precise docking. High-quality buffers absorb the lorry's dynamic forces during the docking operation. Robust anti-collision bollards prevent expensive impact damage indoors and outdoors on doors or dock shelters. Docking assistance systems carefully guide the driver to the ramp with warning lights.

Wheel guides and docking assistant DAP

Lightguide manoeuvring guide

TARGETED AND CENTRED DOCKING. Wheel guides and visual manoeuvring guides direct the driver during the docking operation. A good docking position ensures the function of dock shelter and dock leveller. Sophisticated systems such as the DAP docking assistant and Lightguide manoeuvring guide help the driver selectively reduce the approach speed.

➔ For further information, see from page 98.

IMPACT FORCES EFFECTIVELY DISSIPATED. The forces that arise during docking can be huge. PU and steel buffers are much more resistant to wear and damage than those made of rubber. The absorption, however, is also important to the longevity of the ramp as a whole. The hollow chamber buffer behind the steel plate of the SB 15 and SB 20 does a great job of intercepting docking forces.

➔ For further information, see from page 92.

NAGEL
34
35

24

Dock levellers

26

Loading houses

28

Dock shelters and seals

30

Buffers, mounting plates and mounting brackets

32

Wheel chocks, manoeuvring guides and docking assistant

34

Warning lights and working lamps

Dock levellers

An optimum strategy for the right dock levellers improves efficiency in any logistics company. Select the ramp height so that the height difference to the lorry loading surface is as small as possible. You should also consider the vertical movement of the vehicle, e.g. due to the spring travel during loading and unloading, or the parking heights for swap containers.

➔ For further information, see from page 38.

TOP LEFT. Hydraulic dock levellers effortlessly bridge greater height differences. The HLS2 with hinged lip is available with a rated load of up to 180 kN for loading heavy goods.

TOP RIGHT. When loading surface heights are almost identical and there is only a small difference in height to the loading platform, mechanical dock levellers are ideally suited for fast loading and unloading.

BOTTOM. Hörmann dock levellers with particularly flat transitions are the ideal solution to compensate for the difference in height between different loading surfaces and the loading platform.

Loading houses

Energy losses outside of loading times are minimized because the entire loading site is placed in front of the hall and the door closes the hall completely. This makes it easy to implement sustainable loading concepts. In addition, loading houses are highly recommended in modernisations because the hall can be fully utilised up the external walls. Loading houses can be arranged at different angles, depending on the available exterior area, so as to create sufficient manoeuvring room for docking. If a high number of loading sites is required, loading houses can be coupled to create in-line arrangements that are both inexpensive and visually appealing.

➔ For further information, see from page 74.

TOP LEFT. Loading houses in an angled arrangement provide a space-saving solution if external space is limited.

TOP RIGHT. Loading houses with the DOBO system are ideal for energy-saving concepts.

BOTTOM. Protection of personnel and goods against adverse weather effects. The double-skinned cladding of the loading house also reduces noise during the loading process.

TOP LEFT. Flap dock shelters are the first choice for different vehicle sizes.

TOP RIGHT. Inflatable dock seals are ideal for energy-saving loading concepts. The cushions are well protected in the home position and are not in contact with the vehicle when docking. Only after docking is completed do they effectively enclose the vehicle.

BOTTOM. The cushion dock seal BBS fulfils the special requirements of delivery vans, as its shape is optimally matched to the outer contour of these vehicles.

Dock shelters and seals

They seal the clearance between the building and the lorry. As a result, they protect goods and personnel against adverse weather effects when the door is open. They also effectively reduce ventilation heat losses during the loading and unloading process, hence saving energy costs. Dock seals and shelters are particularly efficient when they are optimally adapted to the docking vehicles and the loading situation concerned. Hörmann offers a wide range of flexible versions with individual equipment options such as corner cushions.

➔ For further information, see from page 78.

Buffers, mounting plates and mounting brackets

Buffers are an indispensable part of the loading site. They protect buildings and vehicles against damage by the lorry's dynamic forces during the docking operation. Selecting the right design version, correct dimensioning and proper positioning are essential for optimum effectiveness of the buffers. Mounting brackets can be used to adjust the buffers to a higher docking position.

➔ For further information, see from page 92.

TOP. Buffers DB 15 and DB 20 made of rubber or PU protect against damage by docking forces.

BOTTOM LEFT. The VBV4 and VBV5 moving buffers are used in the energy-saving DOBO loading concept. The buffer can be lowered once the docking operation is complete.

BOTTOM RIGHT. The SB 15 and SB 20 steel buffers combine longevity with outstanding absorption properties and are the ideal choice for a high docking frequency.

Manoeuvring guides, docking assistance and wheel blocking

Wheel guides or electronic docking aids assist the driver with docking and prevent damage to the vehicle and ramp. A precise docking position is important for effective support of the dock leveller, a safe loading process and the proper functionality of the dock shelter. In addition, we recommend measures such as wheel chocks or wheel-blocking systems to ensure that the lorry remains in its safe docking position.

➔ For further information, see from page 98.

TOP LEFT. The steel wheel guide assists the driver with docking. The WSPG wheel chock with sensor releases the loading platform only upon contact with the tyre.

TOP CENTRE. The Lightguide manoeuvring guide scores points when visibility is poor.

TOP RIGHT. The electronic docking aid DAP helps the driver approach the ramp using warning lights.

BOTTOM. The MWB2 wheel-blocking system reliably prevents the lorry from unintentionally rolling away and causing danger. This can happen, for example, when the forklift enters and leaves.

TOP. Warning lights outside communicate with the driver using internationally understandable traffic light colours.

BOTTOM LEFT. In addition to warning lights, acoustic signal transmitters also increase workplace safety and warn in case of malfunction.

BOTTOM CENTRE. Steel bollards protect against damage by industrial trucks.

BOTTOM RIGHT. The LED docklight ensures good visibility in the loading area.

Signal transmitters, working lamps and bollards

If there is no visual contact at the loading site, communication between the lorry driver and logistics personnel is limited. Interior and exterior warning lights provide visual information, e.g. that the lorry has reached the docking position and is secured. A green light outside means the driver can leave the ramp after the loading process. There is usually insufficient additional lighting in the lorry's loading area. Docklights with a swivel arm ensure a well-lit loading area, both day and night. Loading is so much safer and faster.
In addition, damage to the transported goods is largely avoided.

➔ For further information, see from page 103.

29
30
HORMANN

Versions Accessories Technology

38 Mechanical dock levellers

40 Mechanical tailboards

42 Hydraulic dock levellers, controls, DOBO system

74 Loading houses

78 Flap dock shelters

84 Inflatable dock seals

88 Cushion dock seals

92 Buffers, mounting plates and mounting brackets

98 Manoeuvring guides, wheel blocking, wheel chocks

103 Anti-collision bollards and collision guards

Mechanical dock levellers MLS / MRS

For identical vehicle heights and low height difference to the building floor

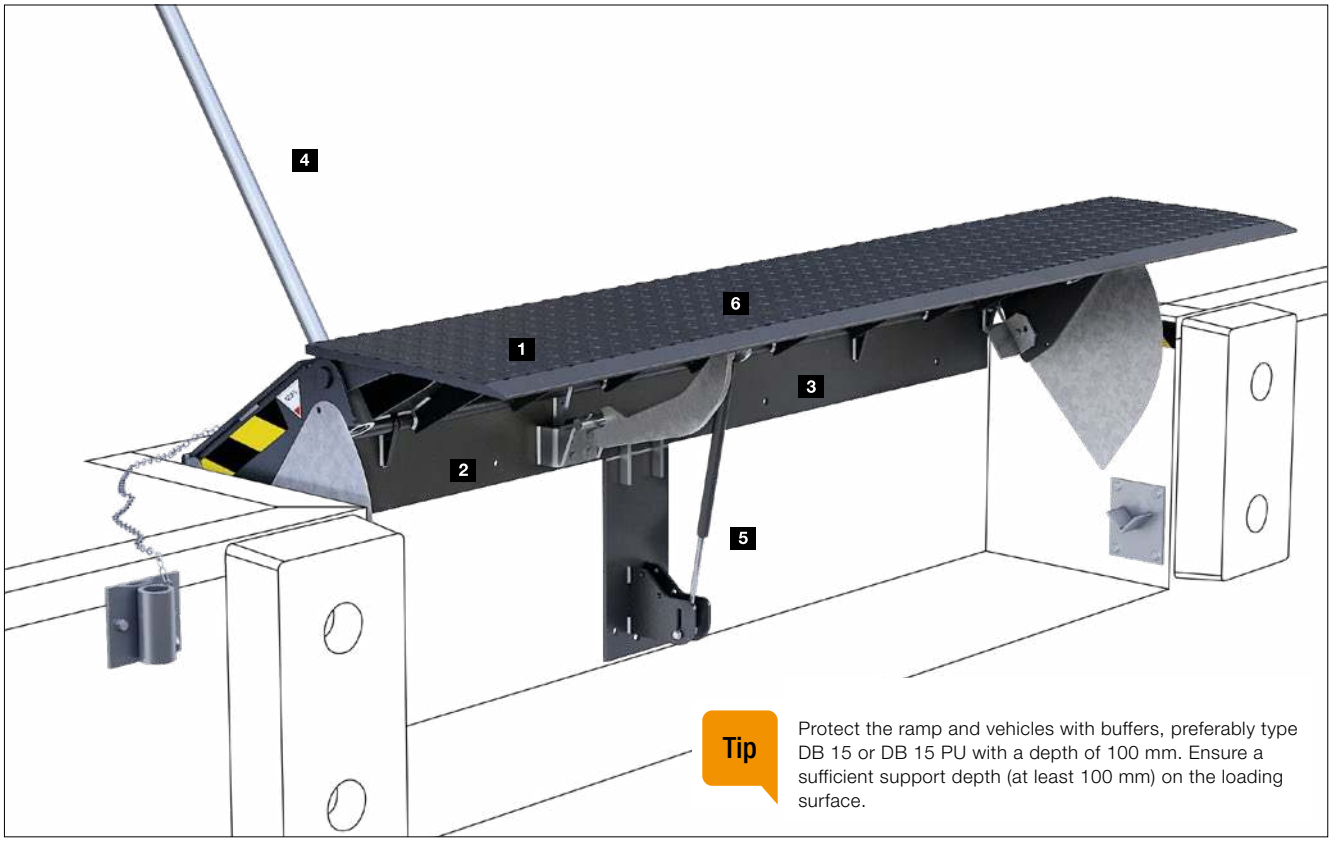

Tip Protect the ramp and vehicles with buffers, preferably type DB 15 or DB 15 PU with a depth of 100 mm. Ensure a sufficient support depth (at least 100 mm) on the loading surface.

Mechanical dock leveller MLS in Traffic black RAL 9017

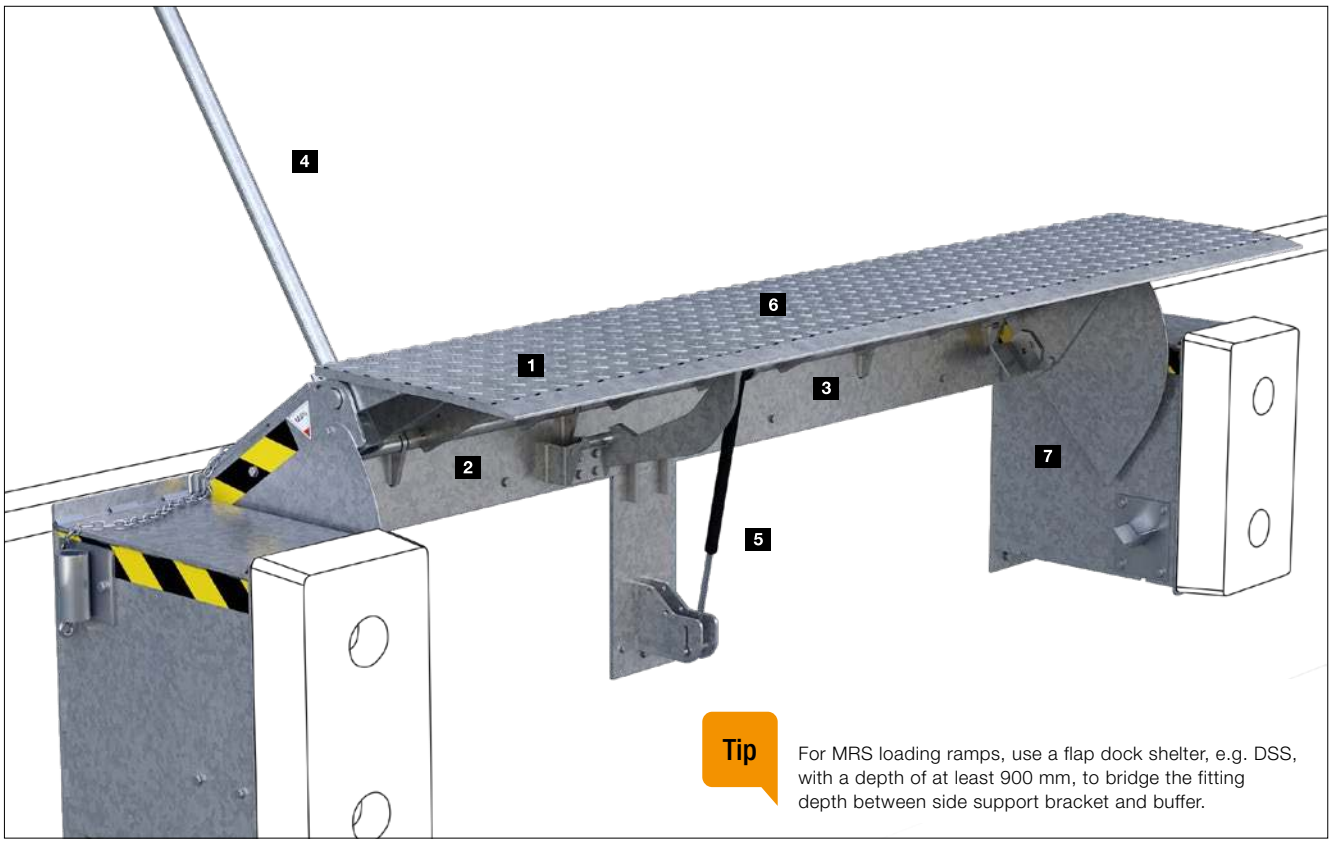

Tip For MRS loading ramps, use a flap dock shelter, e.g. DSS, with a depth of at least 900 mm, to bridge the fitting depth between side support bracket and buffer.

Mechanical dock leveller MRS-V in galvanised version

Torsionally flexible dock leveller platform

The platform 1 is made of moulded, anti-slip steel S 235 (6 / 8 mm thick).

Robust hinged lip

The hinged lip 2 supplied is made of moulded, anti-slip steel S 355 (12 / 14 mm thick). The closely spaced hinge strips (32 units on a 2 m wide dock leveller) improve the force distribution compared to hinge bushings. The open construction prevents dirt collecting in the hinge. The angle of the lip allows a convenient support on the loading surface.

Overall construction resistant to working stresses

The self-supporting steel articulated design 3 is resistant to working stresses up to 60 kN as standard (rated load according to EN 1398). Particularly narrow versions up to 1500 mm can be loaded with max. 45 kN.

Simple operation

The platform is raised using the control bar 4. The hinged lip folds out in an opposing movement and is positioned on the loading surface. The force is within the limits set by EN 1398.

Gas spring support

The gas spring 5 ensures counterbalance and facilitates operation. The force remains within the limit values set by EN 1398.

Corrosion protection

The steel surfaces 6 are sandblasted and supplied in 2C PU-coated Traffic black RAL 9017. On request, the surface is also available in Ultramarine blue RAL 5002, RAL to choose or galvanised. The support brackets 7 on the MRS dock leveller are generally galvanised.

TIP. We generally recommend the galvanised version for dock levellers in outdoor areas.

Simple, safe and reliable fitting

- Supplied including lifting equipment for forklifts
- MLS: fitting by welding in a prepared pit. Alternatively with cast box: self-supporting base frame, closed on three sides, provided with edge brackets and anchors for fitting by casting in an on-site timber mould
- MRS: fitting by welding in front of the loading platform. Side support brackets, either vertical (MRS-V) or horizontal (MRS-H), with screw-in sleeves for easy buffer fitting

Working range* and dimensions

Ordering widths (mm)	1250, 1500, 1750, 2000, 2250
Overall length of dock leveller (mm)	Approx. 735
Positioning (mm)	Approx. 150
Depth of support brackets	Type MRS: 435 mm without buffers

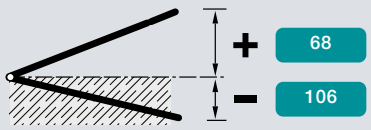

* At max. 12.5% slope according to EN 1398: above level 68 mm, below level 106 mm

Mechanical tailboard MRF

Where special workplace safety requirements have to be met

Mechanical tailboard MRF in galvanised version

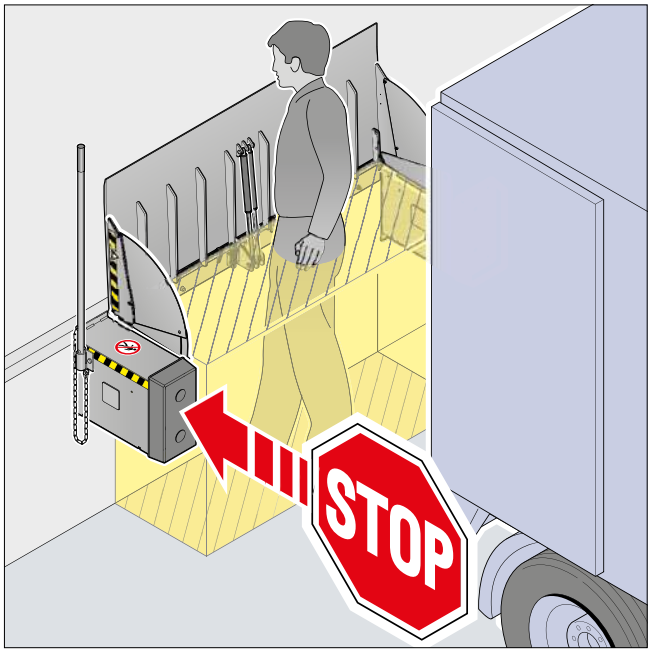

Safety zone through vertical home position

Side brackets with railing and buffer SB15

Tailboard with vertical home position

Together with the side brackets, the vertical home position 1 creates a safety zone to protect anybody that happens to be within the manoeuvring range of the docking vehicle.

Torsionally flexible platform

The platform 2 is made of moulded, anti-slip steel S 355 (12 / 14 mm thick). It is additionally reinforced on the underside. The angle of the lip allows a convenient support on the loading surface.

Sturdy buffer brackets

The lateral, vertically arranged brackets create the correct distance for the vehicle to dock. They can also be equipped with a railing 4 on request

Overall construction resistant to working stresses

As is the case with hydraulic dock levellers, the self-supporting steel articulated design is resistant to working stresses up to 60 kN at a width of 2000 or 2250 mm (rated load according to EN 1398). With narrow versions, this resistance is correspondingly lower.

Simple operation

The tailboard is released using the foot. The platform is effortlessly lowered with the aid of the control bar 5.

Gas spring support

The gas springs 6 provide the counterbalance and facilitate operation.

Corrosion protection

The steel surfaces 7 are sandblasted and supplied in 2C PU-coated Traffic black RAL 9017. On request, the surface is also available in Ultramarine blue RAL 5002, RAL to choose or galvanised. The brackets 3 are generally galvanized.

TIP. We generally recommend the galvanized version in outdoor areas.

Simple, safe and reliable fitting

- Supplied including lifting equipment for forklifts
- Fitting by welding in front of the loading platform. Side support brackets with screw-in sleeves for easy buffer fitting

Working range* and dimensions

Ordering widths (mm)	1250	1500	1750	2000	2250
Length of tailboard (mm)	870	870	870	870	870
Rated load in accordance with EN 1398 (kN)	38	45	54	60	60
Depth of support brackets	560 mm for buffers DB 15 (PU), SB 15 510 mm for buffers VB 2, SBM				

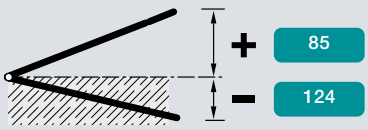

* At max. 12.5% slope according to EN 1398: above level 85 mm, below level 124 mm

Hydraulic dock levellers

With changing vehicles and for larger height differences to the building floor

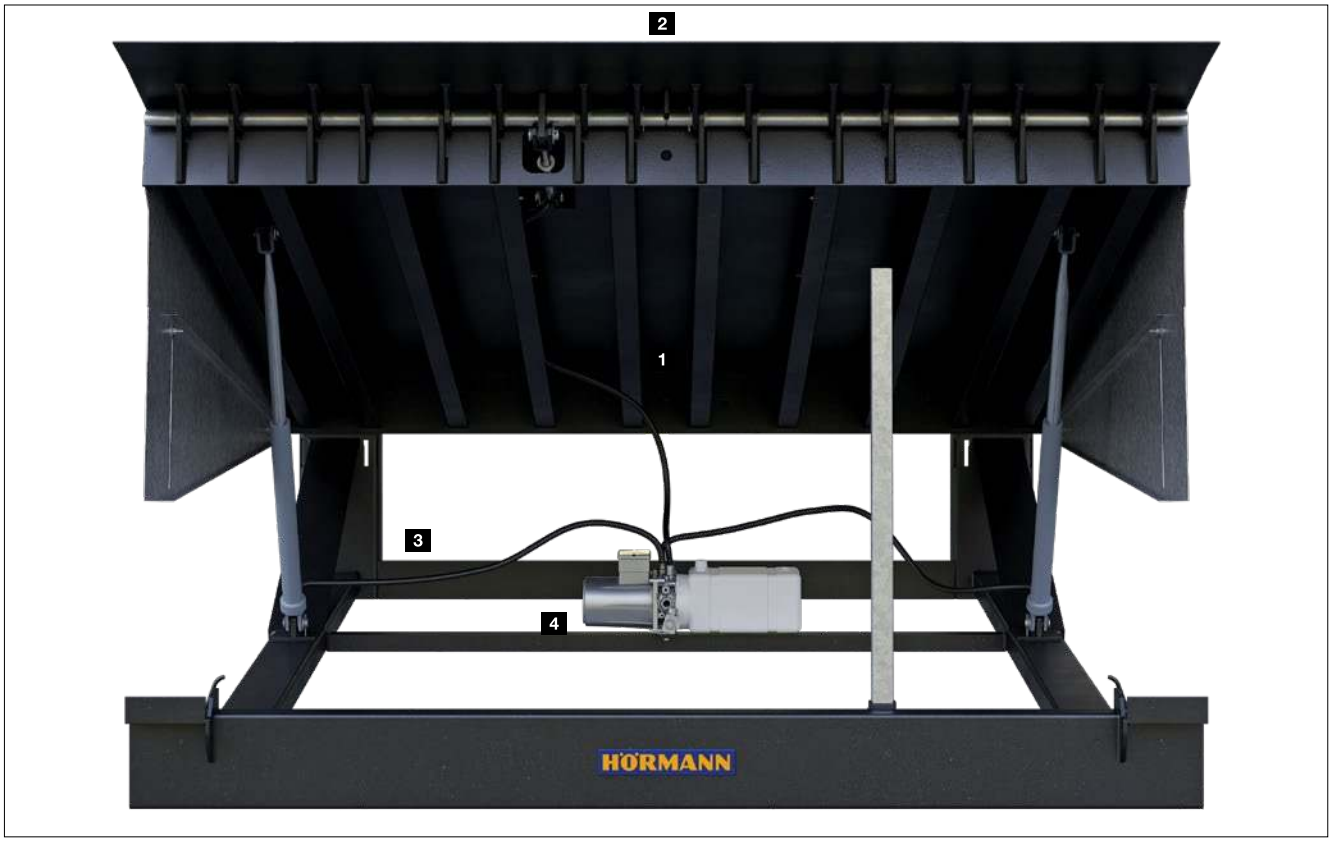

Hinged lip dock leveller, type HLS 2 pit model P for fitting by welding

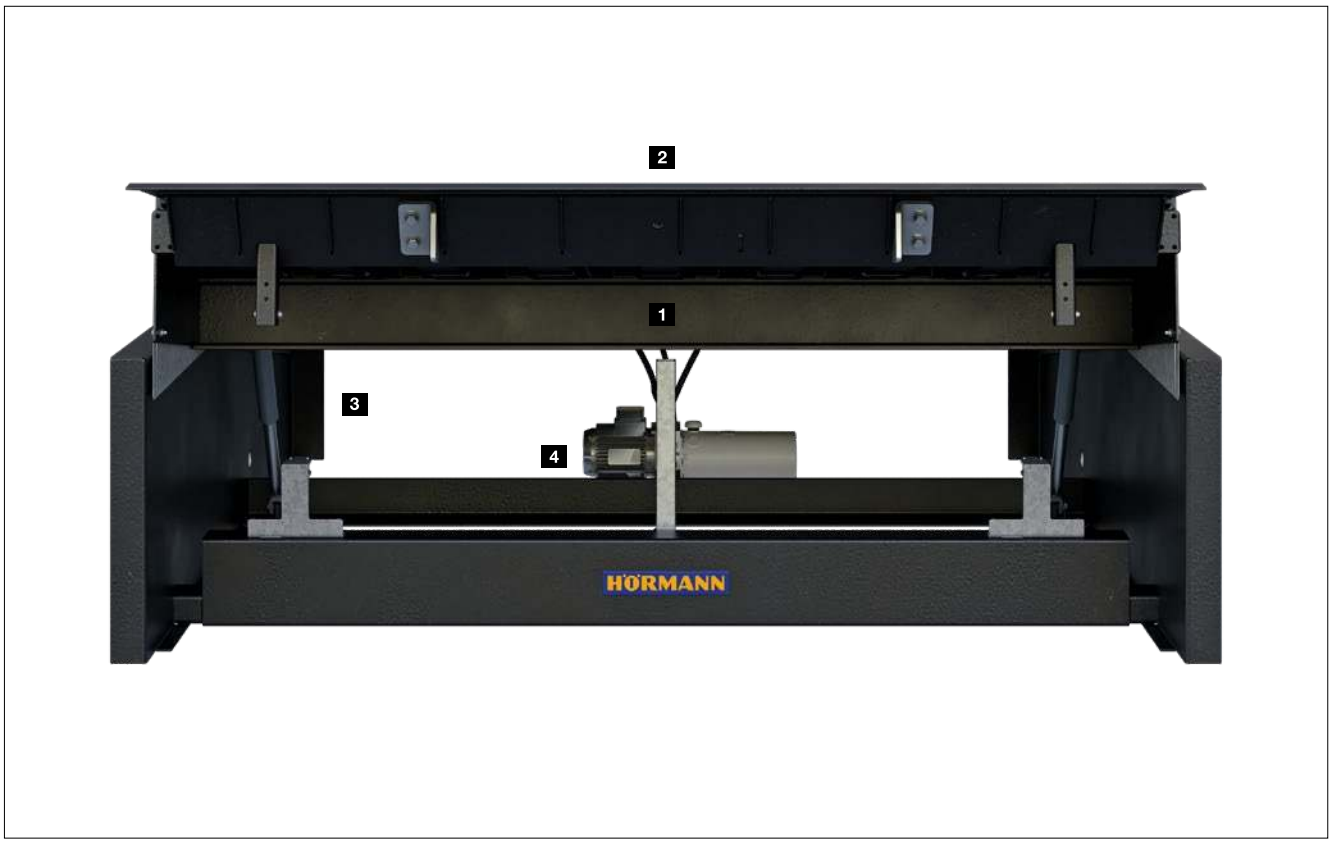

Telescopic lip dock leveller, type HTL 2 frame model FR with self-supporting base frame for fitting by casting

Torsionally flexible dock leveller platform 1

The S 235 moulded steel platform is made of a single piece up to a size of 2000 × 3000 mm. With wider and longer dock levellers, a carefully made welding seam joins the plates, resulting in a continuously sturdy platform. Precise profile dimensioning on the platform bottom edge and the double cylinder hydraulic system enable an extremely high torsional flexibility without sacrificing stability. This allows the dock leveller to move along with the lorry loading surface, even with varying side tilt. The number and design of the beams prevent deformation (lane grooves) beyond the degree required by EN 1398. The platform on hinged lip dock levellers is 6 / 8 mm thick as standard, 8 / 10 mm thick on telescopic lip dock levellers. On request, an 8 / 10 mm thick platform is also available for hinged lip dock levellers, e.g. to avoid deformation when reach lift trucks regularly roll over the platform.

Sturdy lip 2

The hinged lip and telescopic lip are made of running plate from a single piece. The lip made of S 355 moulded steel fulfils all requirements with a thickness of 12 / 14 mm.

Overall construction resistant to working stresses 3

The dock leveller can be loaded as standard up to 60 kN (rated load according to EN 1398). The HTL 2 telescopic lip dock leveller up to 100 kN and for particularly heavy goods, the HLS 2 hinged lip dock leveller up to 180 kN are available for higher rated loads.
The dock leveller is rated for a temperature range of –10 to +50°C in the area around the hydraulic system, i.e. below the dock leveller. At low temperatures, we recommend the use of special oil to ensure trouble-free loading bridge movement.

Reliable double cylinder hydraulic system 4

2 main cylinders ensure the balanced, reliable and, most importantly, safe operation of the dock leveller at all times. In case of an emergency stop, e.g. when the lip is no longer supported because the lorry has rolled away, the automatic emergency stop valves of both cylinders react almost simultaneously. As a result, the platform is prevented from tilting during an emergency stop. On request, dock levellers HLS 2 and HTL 2 can be equipped with an oil drain pan. At low temperatures, we recommend the use of special oil to ensure trouble-free loading bridge movement.

Hydraulic dock levellers with hinged lip

For simple bridging and for rated loads of up to 180 kN

1

2

3

Robust hinged lip

The closely spaced hinge strips 1 (32 units on a 2 m wide dock leveller) on one axle (28 mm diameter) enable better force distribution compared to hinge bushings. The open construction prevents dirt collecting in the hinge, e.g. wood chips.

Simple operation at the push of a button 2 3

The electro-hydraulic system moves the platform to the highest position and automatically extends the hinged lip. The platform is then lowered until the hinged lip is placed on the loading surface. Now the lorry can be quickly and safely loaded and unloaded. The angle of the lip allows a convenient support on the loading surface. The platform and lip are edge to edge 3. The front edge offers a flat transition to the loading surface due to the particularly angled milling. This makes hinged lip dock levellers a good choice for sensitive goods.

Versions

Dock leveller HLS

The economical solution:

- Up to 3 m length
- Up to 60 kN of rated load acc. to EN 1398
- Fitting model for fitting by welding

Dock leveller HLS 2

Versatile construction:

- Up to 5 m length
- Optionally up to 180 kN rated load acc. to EN 1398
- Pit model for fitting by welding
- Frame model for casting in concrete
- Frame model for fitting by welding in a preassembled frame

Loading platform HRS

The dock leveller / pedestal combination as a substructure for a loading house:

- Up to 3 m length
- Up to 60 kN of rated load acc. to EN 1398

➔ Further information can be found on page 74.

Hydraulic dock levellers with hinged lip

Working ranges, dimensions

HLS 2 with hinged lip

HLS / HRS with hinged lip

Note:
The values indicate the difference in height that can be bridged, taking into account the maximum gradient / inclination according to EN 1398 of 12.5%. The technically possible range is considerably larger depending on the dock leveller length. Note that these are limit values. Preferably select the next higher length size. Plan the ramp height so that the height difference to the lorry loading surface is as small as possible.

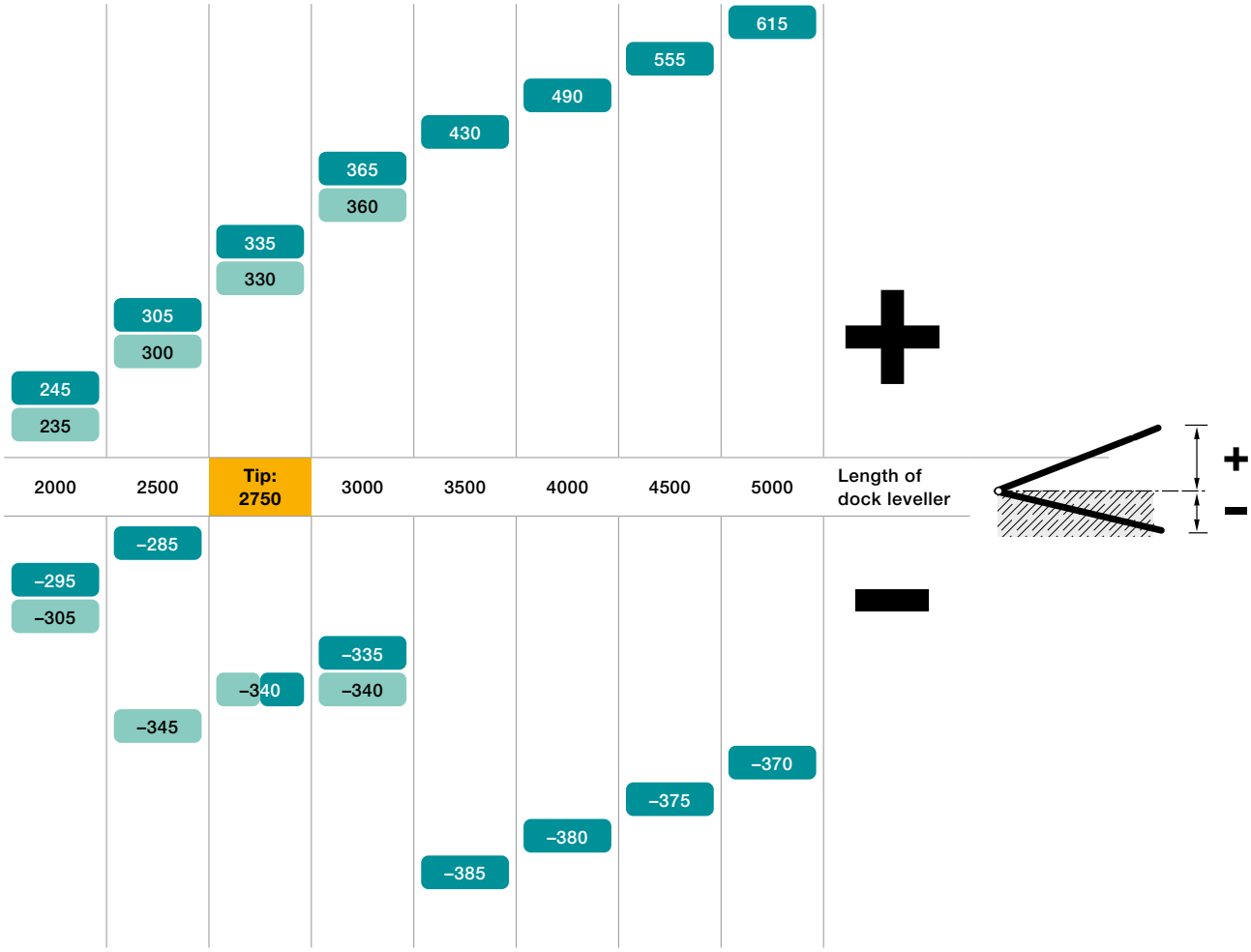

Dimensions

Ordering length Dock leveller	2000	2500	2750	3000	3500	4000	4500	5000	Ordering width Dock leveller
Installation height HLS	650	650	650	650					2000, 2100, 2250
Installation height HLS 2	595	595	645	645	745	745	745	745	2000, 2100, 2250
Ramp height HRS	875 – 1360								2000, 2100, 2250 Overall width 3500 mm

All dimensions in mm

Tip

A dock leveller HLS 2 with a length of 2750 mm covers a larger height difference below level than a dock leveller with a length of 3000 mm, saving you money.

Hydraulic dock levellers with telescopic lip

For energy-saving loading concepts and precise bridging

1

2

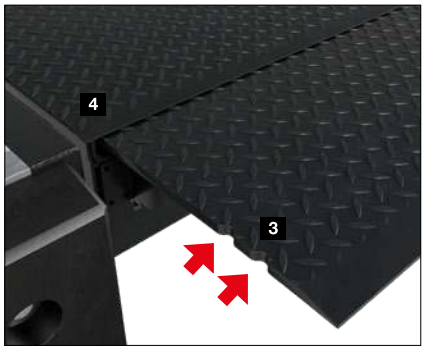

4

3

Stable, continuously extendable telescopic lip

The telescopic lip with a sturdy front edge 1 is reinforced throughout. The overlap limiters on the bottom of the telescopic lip prevent incorrect loading from an excessively low position.

Acoustically insulated pedestal 2

Steel coming into contact with steel generates noise that is neither pleasant nor healthy for employees. The rubber buffers on the pedestal of the telescopic lip dock leveller absorb the contact noise generated as the platform is being positioned.

Simple operation for precise positioning

The telescopic lip can be selectively extended and retracted via separate control buttons, enabling it to be precisely placed on the loading surface under control. The continuous and precise extending and lowering of the telescopic lip allows simple and safe unloading, even of fully loaded lorries. This way, even pallets that are situated at the end of the vehicle's loading surface and thus only provide limited telescopic lip space, can be loaded. Notches on the outside 3 indicate the correct contact area on the loading surface (100 – 150 mm).
The lip is slightly tilted to guarantee convenient contact with the loading surface. Flat transitions from the platform to the lip and to the loading surface ensure safe loading 4.

Versions

Dock leveller HTL 2

The flexible construction:

- Up to 5 m length
- Optionally up to 100 kN rated load acc. to EN 1398
- Pit model for fitting by welding
- Frame model for casting in concrete
- Frame model for fitting by welding in a preassembled frame

Loading platform HRT

The dock leveller / pedestal combination as a substructure for a loading house:

- Up to 3 m length
- Up to 60 kN of rated load acc. to EN 1398

➔ Further information can be found on page 74.

Hydraulic dock levellers with telescopic lip

Working ranges, dimensions

With telescopic lip 1200 mm

With telescopic lip 1000 mm

With telescopic lip 500 mm

Note:
The table indicates the maximum working range (limit range) when the lip is extended completely. Choose the length of the dock leveller to match the working range, but the length of the lip to match the required bridging. The larger working range should not be a reason to choose a longer lip. This effect can only be achieved if the distance to the ramp is also increased. In this case, check for possible further effects of this measure or let us advise you.

2000	2500	Tip: 2750	3000	3500	4000	4500	5000	Length of dock leveller
							750	+
						680	730	
					615	660	670	
				550	595	605		
			480	530	540			
		450	460	470				
	415	430	405					
	395	370						
	340							
325								
270								
								−
	−345							
−350								
	−395	−400	−395			−405	−400	
−410					−415			
	−415		−420	−425				
		−430				−440	−430	
			−440				−440	
		−450			−450	−455		
				−470	−470			
				−490				

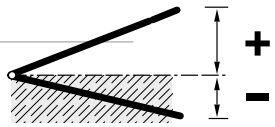

Dimensions

Ordering length Dock leveller	2000	2500	2750	3000	3500	4000	4500	5000	Ordering width Dock leveller
Installation height HTL 2	595	595	645	645	745	745	745	745	2000, 2100, 2250
Ramp height HRT	975 – 1425								2000, 2100, 2250 Overall width 3500 mm

All dimensions in mm

Tip

A dock leveller with a length of 2750 mm covers a larger height difference below level than a dock leveller with a length of 3000 mm, saving you money.

Hydraulic dock leveller HTL 2 ISO

Reduction of transmission and ventilation heat loss

Effective insulation and seal

The HTL 2 ISO efficiently reduces energy losses via the dock leveller. The equipment provides approx. 55% better insulation in the home position and during loading (working position). The insulation panels 1 with a thickness of 50 mm reduce energy losses through the building structure (transmission loss). They are installed directly under the platform and the lip, at almost the same height as the building floor insulation. The remaining thermal bridge is minimal, even behind the dock leveller. Different seals reduce ventilation heat loss, i.e. energy loss via the joints, such as the gap between the dock leveller and the pit 2. When in home position, the loading site is ideally insulated when the hall door in front of the dock leveller is closed up to the lower protruding insulation panel 3. This only requires the hall door to be 250 mm longer.

The insulation also efficiently reduces energy losses in the working position, such as during loading. In this case, the insulation panel is carried along under the lip when it is extended and the transmission is insulated 4. At the same time, the slits created by the design of long telescopic lips are sealed, thereby preventing further ventilation heat loss. This has a particularly positive effect in the case of longer loading times. The 1150 mm long type IC lip bridges the distance between the dock leveller and the vehicle. With its 390 mm free overlap length, the required minimum overlap area of 100 mm stipulated in EN 1398 is always possible, even in the case of offset loading surfaces of refrigerated vehicles, for example.

Tailboard slot is easily accessible at any time

The low installation height despite the insulation enables generous clearance underneath the dock leveller 5, ideal for vehicles with a tailboard. In combination with the door moving down to the panel, the tailboard slot can be used even when the door is closed.

Easy to fit and service

Fitting is as easy as ever thanks to the fully pre-assembled HTL 2 ISO insulation panels and seals. The hydraulics are located underneath the insulation panels and are therefore easily accessible at all times.

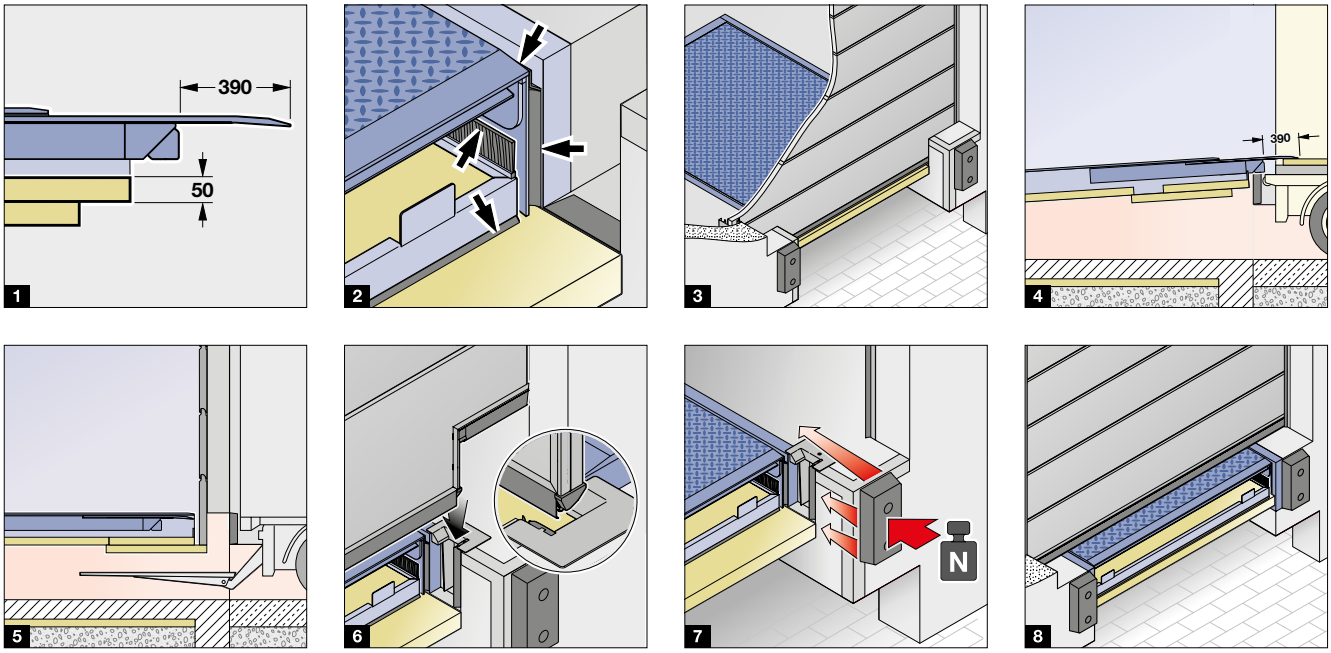

Perfectly matched sectional door solution

As an alternative to the standard door extended by 250 mm, Hörmann sectional doors can also be specially adapted to the contours of the loading platform 6. The lowered section features recesses on the sides. The centring and sealing unit for the door guide incorporated into the pit ensures excellent sealing. This requires only a small recess in the pit. The building structure in the docking area does not require additional reinforcement as is the case with wide door recesses. Impact forces of docking vehicles 7 can be dissipated into the building floor. This prevents damage to the building structure and the dock leveller. Sectional doors with low-track section are available as SPU 42 / APU 42 and SPU 67 Thermo / APU 67 Thermo.

Renovating existing loading sites

The HTL2 ISO also improves the energy balance at existing loading sites where the door moves onto the platform of the dock leveller 8. Provided that the ordering sizes match, the existing frame can be reused in case of replacements.* As a rule, the 650 mm long lip variant is sufficient for these loading sites, with the lower insulation panel flush with the dock leveller.

* Special sizes are not possible. Note that the front beam is in a different position. For the pit drawing, see the Hörmann product portal for architects and planners.

Sizes and versions

Ordering length*	2000 mm	2500 mm	2750 mm	3000 mm	Ordering width
Installation height	595 mm	595 mm	645 mm	645 mm	2000, 2100, 2250 mm
Telescopic lip length	650, 950 mm	650, 1150 mm			
Rated load	60 kN in accordance with EN 1398				
Fitting models	P, FR, F, B				

* Ordering length > 3000 mm on request

All dimensions in mm

Safety features as standard

Operational safety through safety components

1

3

2

4

Foot guard plates 1

Side sheets prevent the feet getting trapped between the loading platform and dock leveller. The black-yellow marking indicates the working position.

Maintenance supports 2

They allow the safe performance of maintenance work.

Anti-slip profiling

The platform is manufactured as standard from anti-slip running plate 3 4.

Standard surface finish

The steel surfaces are sandblasted and 2C PU-coated in-house. We supply the dock leveller in Traffic black RAL 9017 3.

Optional surface finish

The high-quality coating is optionally available in Ultramarine blue RAL 5002 or in RAL to choose, to match the overall colour design.

Better corrosion protection

For increased corrosion protection requirements, we recommend the galvanized version 4.

TIP. For outdoor use, always choose the galvanized version.

5

6

Better acoustic insulation and improved anti-slip function 5

In order to significantly reduce the noise when driving over the dock leveller, a thicker anti-slip coating is applied. This reduces contact noise to create a more pleasant work environment. The sound emissions depend on the tyre type and speed of the transport vehicles as well as on any inherent sound of the transported goods.
An anti-slip coating of class R11 according to DIN 51130 is recommended e.g. in case of increased moisture due to cleaning in meat processing plants. The high-quality coating is applied to the moulded material of platform and lip. This ensures that even in case of damage, the anti-slip requirements of EN 1398 continue to be met.

Reduced ventilation heat loss 6

For dock levellers that are fitted inside the building, gap sealing is strongly recommended. When the dock leveller is in the home position and at low inclination also in working position, the side gap next to the dock leveller is sealed. It prevents drafts as well as the escape of warm air. The insulated dock lever HTL 2 ISO has gap sealing as standard.

Hydraulic dock levellers

Lip shapes and lip lengths

Lip shapes

Type R, straight 1

- Standard up to an ordering width of 2000 mm,
- optionally over 2000 mm

Type S, angled 2

- Standard over an ordering width of 2000 mm,
- optionally up to 2000 mm

Type SG 3

- With separate lip segments to accommodate various lorry widths
- Resistant to working stresses of up to 600 kg
- The folding out or sliding out of the segments stops when they encounter an obstacle, e.g. the lorry
- Folding in or sliding in takes place automatically when returning to the home position
- Exclusively available for type HLS 2, HRT and HTL 2 with a rated load of up to 60 kN: for hinged lips approx. 145 mm wide, for telescopic lips approx. 170 mm wide
- Surface of lip segments for HLS 2 same as dock leveller, with telescopic lip dock levellers always galvanized

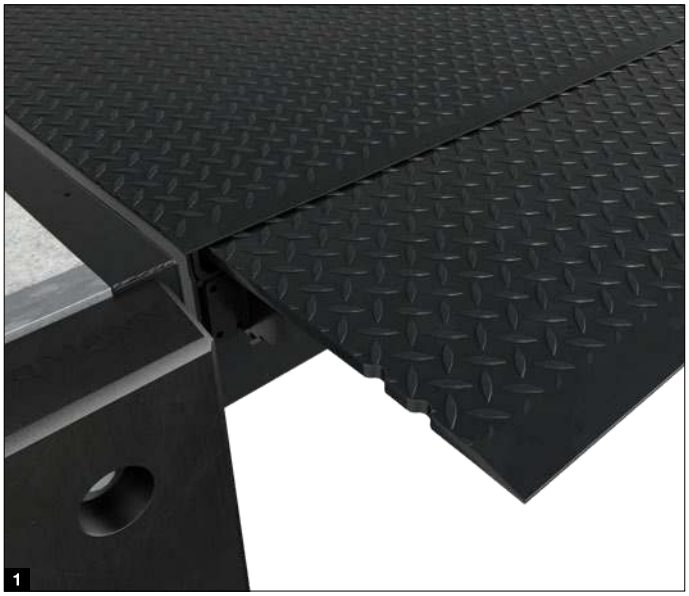

1

2

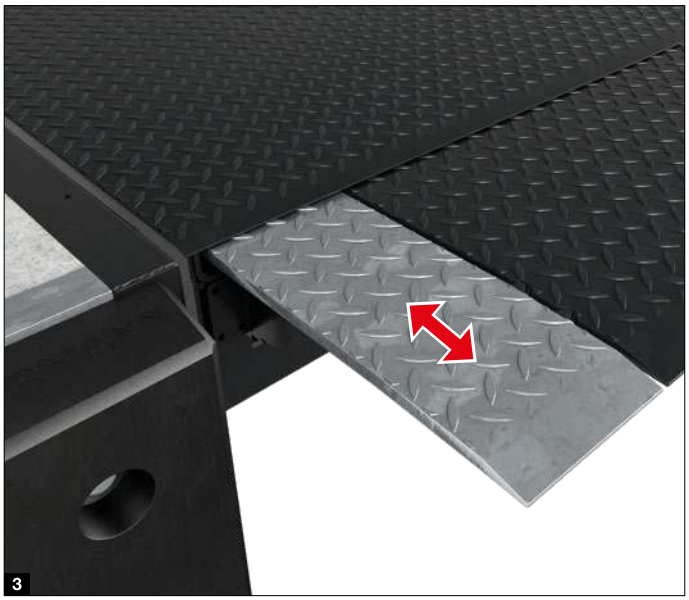

3

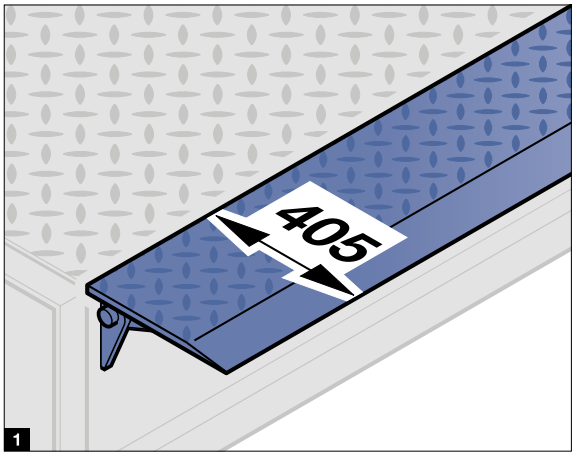

1

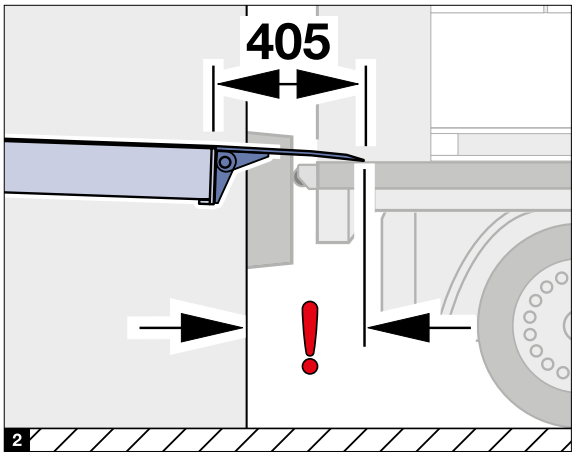

2

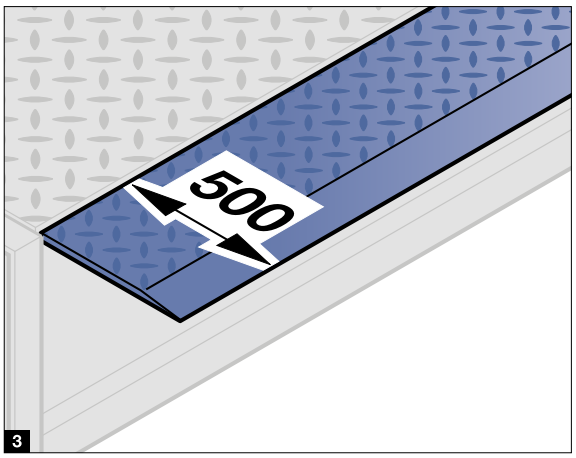

3

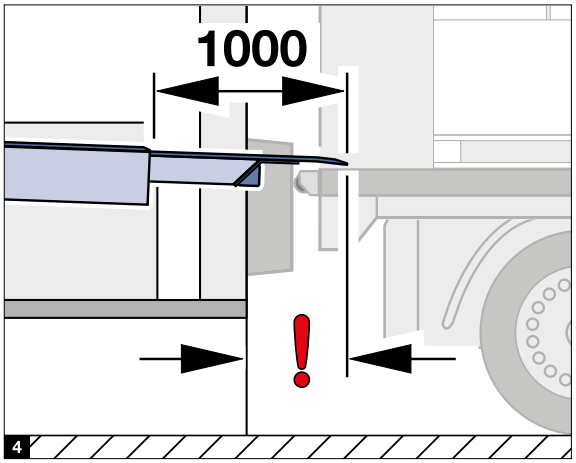

4

Lip lengths
Select a lip length so that a contact surface of at least 100 mm in accordance with EN 1398 and maximum 150 mm is possible. Note the distance from the lorry to the ramp due to buffers on the ramp and vehicle.

Hinged lip dock leveller
The lip has a standard length of 405 mm 1, on request also 500 mm. When selecting, please note that the protruding lip hinge reduces the possible bridging by approx. 75 mm 2. Request detailed information and seek a consultation.

Telescopic lip dock leveller
As standard, the telescopic lip is supplied in a length of 500 mm 3 and made from a single piece. Some applications, particularly when the hall door is positioned in front of the dock leveller, require a longer lip. For such cases, the telescopic lip lengths 1000 mm and 1200 mm 4 are available.

Sturdy lip
The hinged lip and telescopic lip are made of running plate from a single piece. The lip made of S 355 moulded steel fulfils all requirements with a thickness of 12 / 14 mm.

Controls

Hydraulic dock levellers

Simple operation

Hörmann controllers are clear, simple and well designed. An LED light 1 indicates readiness for operation. Hinged lip dock levellers are operated with one button via press-and-hold actuation 2. As soon as the platform has reached its highest level, the lip will automatically fold out. Operation of the platform and lip is separate with telescopic lip dock levellers. Furthermore, two separate buttons for extension 3 and retraction 4 allow exact placement of the telescopic lip.

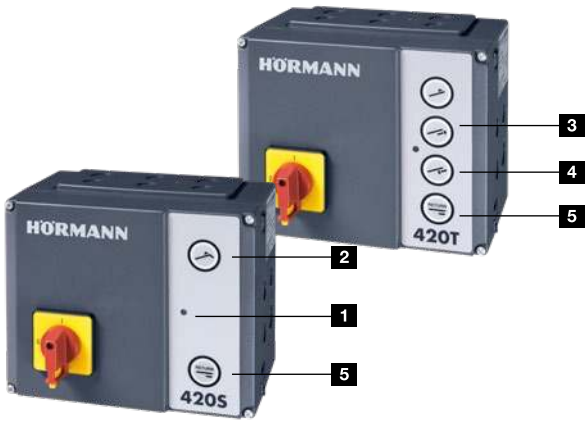

1-button operation of telescopic lip dock levellers

Operation of telescopic lip dock levellers is extremely convenient if the loading surface is not higher than the ramp: the dock leveller can then be moved into position by simply pressing the “Extend telescopic lip” 3 button. The platform automatically raises a few centimetres before the telescopic lip extends.

Automatic return to the home position 5

With only one impulse, the dock leveller is completely returned to its home position. This equipment is standard with Hörmann dock levellers.

Combination control 420 Si / 420 Ti

This solution combines door operation 7 with a standard dock leveller control 6 in one housing.

- Easy to fit
- Inexpensive
- Compact
- Suitable for sectional door operator WA 300 S4 and rolling shutter operator WA 300 R S4 with integrated control

Hörmann industrial controls 8

The controls for doors and dock levellers are characterised by a uniform operating concept with standardised housing sizes and uniform cable sets. The base and cover of the controls can be removed in just a few steps. Punched holes allow for easier cable routing.

BlueControl
Smart set-up and adjustment of control via the app

NEW. Multi-controls with additional functions

The control 560 S or 560 T offers a particularly wide range of features and decisive advantages for fitting, operation and maintenance at the loading site:

- Illuminated keypad 9 for optimum visibility of the control elements at all times
- With Bluetooth receiver as standard, e.g. for simple, time and cost-saving initial start-up via the BlueControl app, see page 58
- Extension PCB with connections for numerous additional functions such as warning lights, flash, docking assistance DAP, roll-up flap and movable buffers VBV5
- 4x 7-segment display 10 for communicating positions, operating states and error messages
- Service menu with maintenance, cycle, and operating hours counter, fault analysis as well as timestamp for events
- HCP bus interface for intelligent accessories
- Easy communication with operator controls 545, 560 via CAN bus interface without additional relay circuit boards or reed contacts

Integrated operation of the dock shelter 11

The operation of an inflatable dock seal or electric top flap is already integrated.

Automated processes via semi-operation sequence control

With the appropriate equipment, the door opens automatically as soon as the dock shelter is inflated or the electric top flap is lowered. When the dock leveller has returned to the home position after loading, the door closes automatically and the dock seal switches off or the top flap retracts.

Controls

Hydraulic dock levellers

	Hinged lip dock levellers			Telescopic lip dock levellers			
Control	Basic control 420 S	Combination control 420 Si	Multi-control 560 S	Basic control 420 T	Combination control 420 Ti	Multi-control 560 T	Multi-control 560 V
Control in protection class IP 65	●	●	●	●	●	●	●
Quadruple 7-segment display			●			●	●
Illuminated keypad			●			●	●
BlueControl app			●			●	●
LED operation indicator	●	●		●	●		
Prepared for connection of wheel chock with sensor	●	●	●	●	●	●	●
Prepared for the dock leveller release function	●	●	●	●	●	●	●
Prepared for door release function	○	○	●	○	○	●	●
Bus interface for interdependent locking			●			●	●
Comfort telescopic lip operation				●	●	●	●
Automatic impulse return	●	●	●	●	●	●	●
Integrated control button for dock shelter			●			●	●
Automatic door closing function			○			○	○
Semi-operation			○			○	○
HCP bus interface			●			●	●
Expanded connection options			●			●	●
Energy saving mode	●	●	●	●	●	●	●

● = As standard
○ = With corresponding equipment

Energy-saving function

When this function is activated, the control enters a virtually de-energised state in home position.

Energy consumption in the energy-saving mode without any connected accessories:

- approx. 2 W/h for 420 S / 420 T and 420 Si / 420 Ti
- approx. 3 W/h for 560 S / 560 T / 560 V

This results in energy savings of up to 80%.

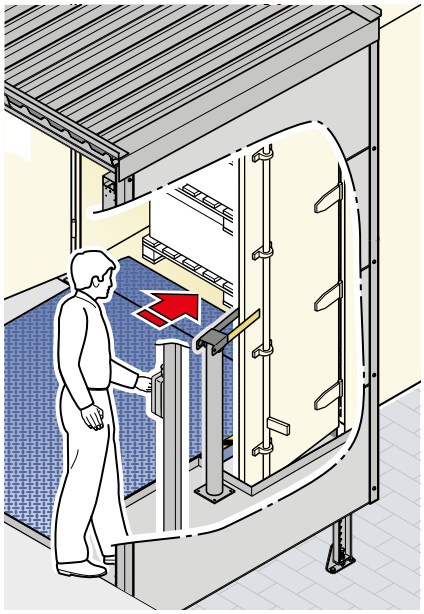

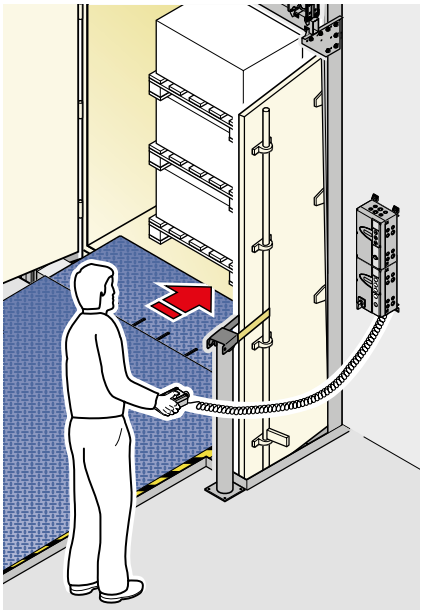

External controls

Operation with a view of the area of travel is a basic safety requirement according to EN 1398.
If the dock leveller control is mounted in the building for loading houses, the area of travel is not completely visible. In DOBO systems, the open lorry door blocks the view of the dock leveller from the control housing. External controls, on the other hand, guarantee standard-compliant and safe operation.

1

2

3

1 **DTH-S with fixed wiring**
for hinged lip dock levellers
in loading houses

2 **DTH-T fixed wiring**
for telescopic lip dock levellers
in loading houses

3 **DTH-T coiled cable**
for telescopic lip dock levellers
in DOBO situations

BlueControl

Smart set-up and service of the dock leveller control via the app

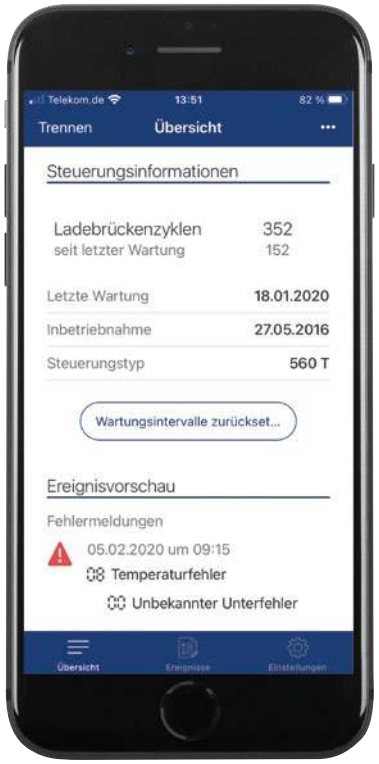

BlueControl

The BlueControl app makes initial start-up, service and maintenance of dock levellers with the controls 560 S / 560 T / 560 V even easier and much more convenient. The plain text menu guides you quickly and easily through the dock leveller settings. You can save the configuration as a template and transfer it to other dock levellers. This means that even in-line arrangements can be configured in virtually no time at all. You can also use the template to reuse the configuration for other logistics projects, regardless of location.
For testing and maintenance, the BlueControl app provides a quick overview of all menu settings. Events and errors can be read out with a timestamp. The maintenance counter is simply reset via the menu once the work has been completed. Time intervals can be adjusted as required.
In case of malfunction, the operator can send the malfunction report directly to the Technical Service via the BlueControl app. This does away with the need to travel for diagnosis and enables fast, targeted support. Downtimes and costs are reduced to a minimum.

Download the app from the Apple App Store
or the Google Play Store.

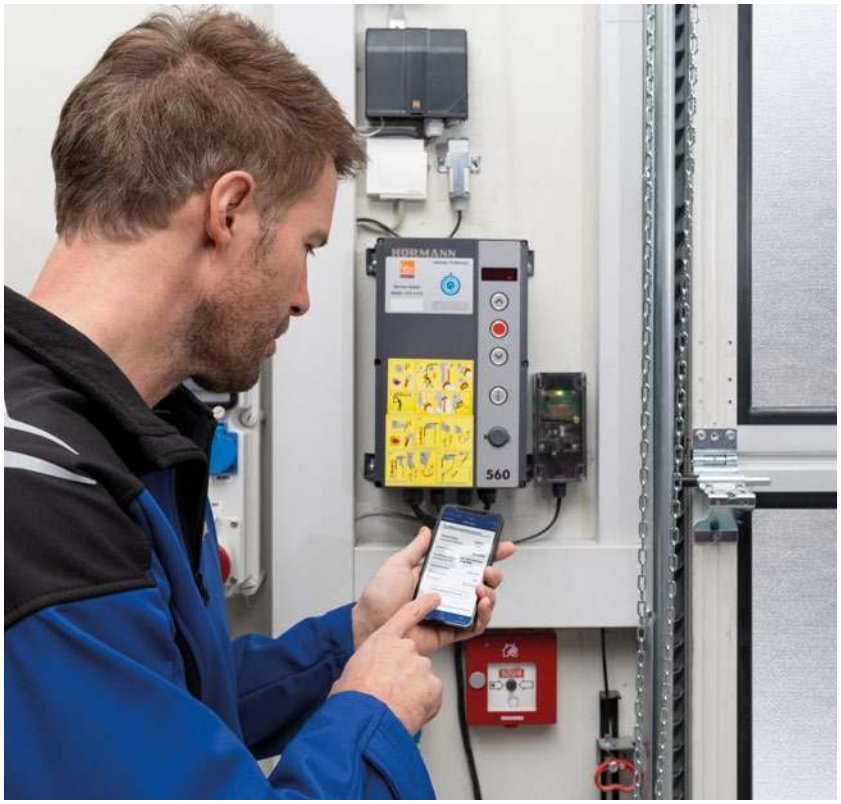

Advantages for the service technician

- Less time required for adjustment work, especially with in-line arrangements
- Less manpower required for maintenance and malfunctions
- Clear communication with the operator

Advantages for the operator

- Cost savings and less downtime in the event of malfunctions
- Free download and use of the user-friendly app
- On-site access to control data via Bluetooth without internet connection
- Time-saving forwarding of control data via e-mail

Controls

Air inlet control AC72

For smoke extraction concepts with industrial doors

Smoke and heat extraction systems are an essential part of preventive fire protection and personal safety. In the event of fire, windows and skylights in the facade and ceiling area are opened, allowing smoke and fumes to be discharged from the building. At the same time, fresh air is supplied from below via building openings such as inlet flaps in the building facade.

Thanks to the air inlet control AC72, door systems can also be integrated into smoke extraction concepts to securely supply fresh air. When the fire alarm system is triggered, the AC72 automatically transmits the impulse for door opening to the required opening height within 60 seconds. Additionally, the AC72 complies with the general requirements for smoke extraction systems, such as monitored battery operation in case of power failure for 72 hours. By integrating industrial doors into the smoke extraction concept of your building, you can reduce the investment and fitting costs of additional ventilation flaps. And because fewer doors need to be integrated into the facade, you improve the building's thermal insulation as well.

- Fulfils the requirements of FVLR Directive 13 (trade association for daylight and smoke ventilation): air vent openings for smoke and heat exhaust ventilation systems
- Conforms to product standard for doors DIN EN 13241

Inlet air control based on DIN EN 12101-2 / 3 and DIN 18 232-9 (8)

- Automatic opening within 60 seconds
- Monitored battery operation in case of power failure for 72 hours
- Monitoring of the line from the RWA to the AC72

Protection goals for supporting self-rescue and third-party rescue

- Support for firefighting operations
- Prevention of uncontrolled smoke propagation
- Delay or prevention of a flash-over
- Property protection
- Containment of environmental damage

RWA smoke and heat extraction

- Smoke extraction in the event of fire thanks to a robust, low-smoke layer near the floor (by using targeted air supply)
- To ensure escape and rescue routes

Hydraulic dock levellers with integrated RFID technology

Non-contact reliable recording of the transported goods

Only from Hörmann

1

2

3

Integrated RFID technology

The proportion of euro-pallets equipped with RFID technology is steadily increasing, in line with the increasing demand for the automated flow of goods. The RFID readers and antennas required for this process are often elaborately installed as a gate around the loading ramp door. Disadvantages of this installation: it occupies valuable space, collisions with the industrial truck can lead to equipment damage and undesirable shielding effects and overreaching can occur.

The shortest path is the best

When the transponder is fitted onto the pallet, the antennas should also be installed nearby. The solution: the antennas are fitted directly underneath the dock leveller, which is permeable to RFID radio signals. With this patented solution, the transponder data reliably reaches the reader via the shortest route, directly when crossing the dock leveller.

Advantages at a glance:

- Reliable transmission due to short distance between the reader and transponder
- The RFID reader is securely fitted underneath the dock leveller, preventing collision damage or damage by mechanical impact
- Minimal soiling due to the protected location of the readers
- Cable-based, stable and reliable data transfer from the reader to the follow-up IT station
- Very economical because only the dock leveller has to be equipped with the RFID technology, and not industrial vehicles such as forklifts

Seek an individual consultation. On request, real loading tests can be performed with your returnable containers and special loading units on a test ramp. Consulting and project planning takes place in cooperation with experienced IT logistics specialists.

Hydraulic dock levellers

Fitting variant for fitting by welding

Rear view of pit model P, delivery including lifting equipment

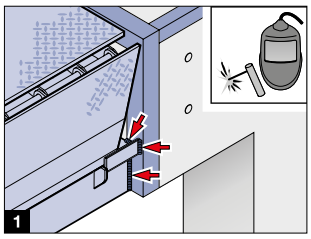

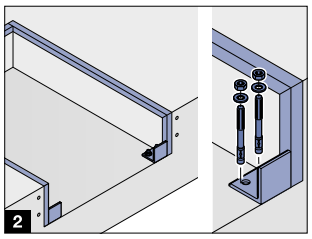

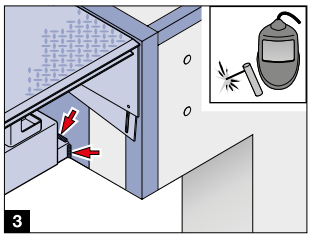

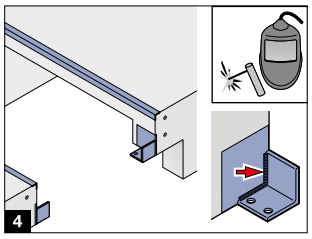

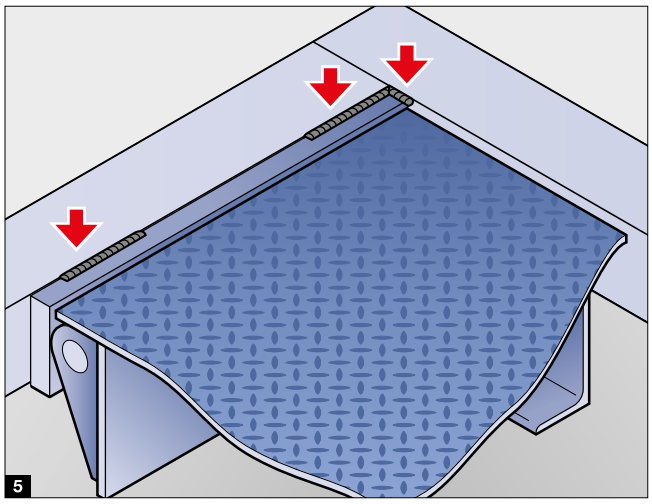

Dock levellers HLS, HLS 2 and HTL 2 as pit model P

A reliable connection to the building structure is crucially important to ensuring the dock leveller's operational safety. Dock leveller HLS as well as HLS 2-P and HTL 2-P as pit models are placed and welded in an existing concrete opening that is already equipped with edge brackets. The important things are:

- Exact and detailed execution of the pit
- Sufficient fixing of the edge bracket
- Consideration of all forces that can be introduced into the building structure

Fitting by welding in the front area

Pit edge bracket

Welding on the vertical edge bracket is possible with:

Hinged lip dock levellers HLS 2-P 1

Hinged lip dock levellers HLS for fitting in a pit without tailboard slot 2

Anchored steel plate

Fitting of the front beam requires an additional steel plate at the front of the pit for:

Telescopic lip dock levellers HTL 2-P 3

Hinged lip dock levellers HLS for fitting in a pit with tailboard slot 4

Fitting by welding on the rear

As standard, dock levellers have a flat steel with cut-outs on the rear 5 . They indicate the exact position and length of the welding seam. This makes fitting extremely easy. An additional advantage during loading: the transitions remain flat thanks to the recessed welding seam. From a rated load of 120 kN, dock levellers require an angle section for design reasons and therefore have a deviating overall length.

Simple modernisation

The pit model is best suited for refurbishment. For different pit dimensions or missing connection points, different adjustments are possible depending on the situation at the dock leveller itself or for the pit.

Let us advise you.

Remove old dock leveller, adjust pit if necessary (e.g. with mounting plates or support brackets)

Position the new dock leveller

Weld to the edge brackets – done.

Hydraulic dock levellers

Fitting variant as a frame model

Rear view of frame model FR (Fig. shows casting height of 200 mm)

Rear view of box model B

Rear view of frame model F

Preassembled frame

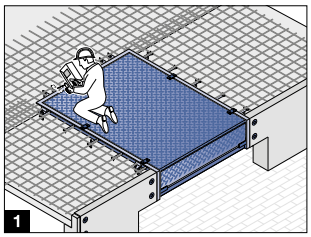

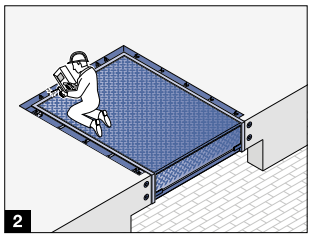

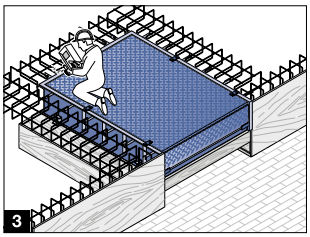

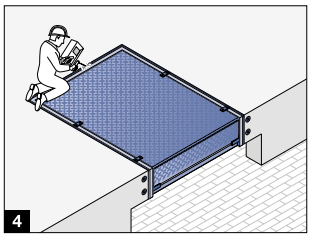

Dock levellers HLS 2 and HTL 2 as frame models FR / B / F
These designs have a self-supporting frame with an all-round edge bracket on three sides and closed sides. Depending on the design, they can be cast during the construction phase or subsequently welded.

Fitting by casting with prefabricated concrete parts 1
When constructing a building with many loading sites, it is common practice to use prefabricated concrete elements. Dock levellers HLS 2 and HTL 2 as fitting model FR can be simply installed during the construction phase. The anchors are either welded to the dimensioned reinforcement or rowlocks before the dock leveller is cast. This creates a consistent concrete surface.

Flexible casting height
Frame model FR is available for different casting heights from 100 mm to 250 mm. The rear of the dock leveller is adjusted at the factory so that the concrete cannot run under the dock leveller.

Fitting by casting in a pit 2
The dock levellers HLS 2 and HTL 2 as FR models are also suitable for fitting in a pit provided with a casting groove.

Fitting by casting with a formwork construction 3
With this fitting method, dock levellers HLS 2 and HTL 2 are supplied as box model B with a casting box. The design is completely closed on the rear and equipped with reinforcement profiles on the sides, so that the side panels do not deform when casting along the entire height.

Subsequent fitting by welding 4
Dock levellers HLS 2 and HTL 2 as frame model F are intended for subsequent, simple fitting by welding. This can be a good alternative

- if it is not yet clear which lip version is required, for example
- or if the aim is to prevent the dock leveller from being damaged during the construction phase.

A preassembled frame is cast into the pit during the construction phase. Unlike pit model B, frame model F is simply hung into the pit and then welded on three sides.

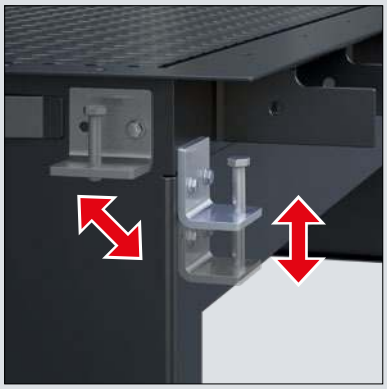

Adjustment angles and solid fitting anchors
You can align the dock leveller optimally with the screw-on adjustment angles. They are pre-assembled at the factory according to the desired casting height, but can be easily repositioned if necessary. The particularly stable anchor brackets on the frame are welded to rowlocks or reinforcement before casting and ensure a reliable connection. Especially on the rear, where strong forces act on the hinges.

Practical ventilation holes
Air pockets weaken the connection of the dock leveller to the building structure. The area below the edge bracket is at the greatest risk here. Ventilation holes in the edge bracket allow air to escape during compression and thus ensure a positive connection.

Hydraulic dock levellers

Lorries and delivery vans on a single loading platform

1

2

Dock leveller HTLV 4 with 3-part telescopic lip

Loading and unloading lorries and vans on the same ramp – something that is becoming increasingly requested. The resulting height differences decide whether this makes sense and is possible. If the ramp height and dock leveller length are selected so that an inclination angle suitable for the loading process is created on all docking vehicles, dock leveller HTLV 4 with 3-part telescopic lip can be a space-saving and economic alternative to separate loading sites. A more favourable inclination angle can be achieved with a longer dock leveller. For lorries 1, the entire width of the telescopic lip can be continuously extended. With a rated load of max. 60 kN, the HTLV 4 can be used like a conventional dock leveller. A simple switch on the control lets you extend the centre section of the telescopic lip, while the side sections follow at a preset distance from the centre section to the vehicle end, making it ideal for delivery vans 2. The sensor-controlled weight compensation reduces the strain on the delivery van as required. At Hörmann, both lifting cylinders have their own valve for weight relief in delivery van mode. The advantage over solutions with one common valve: no oil flow between the cylinders, even when the dock leveller is loaded on one side only. The weight load always is balanced. The dock leveller follows the movement if the loading surface of the delivery van is lowered during loading. This ensures proper positioning at every point. The dock leveller can be loaded in this mode up to 20 kN acc. to EN 1398.

IMPORTANT. Clarify the height differences to be bridged! Lorries and swap containers on one side and delivery vans on the other side usually require different ramp heights. The loading surface heights for delivery vans are much lower than those for lorries and swap containers. As a result, slopes can arise that are no longer practicable for loading and unloading depending on the means of transport. You should therefore always also consider separate loading sites.

Switch-Return button

In the home position for toggling between lorry 1 and delivery van 2 operating modes. In the working position for automatic return to the home position.

Tip

With a longer lip, you cannot reach a larger working range unless you increase the distance between the vehicle and the ramp. To protect the dock leveller from damage during construction, we recommend the frame model F.

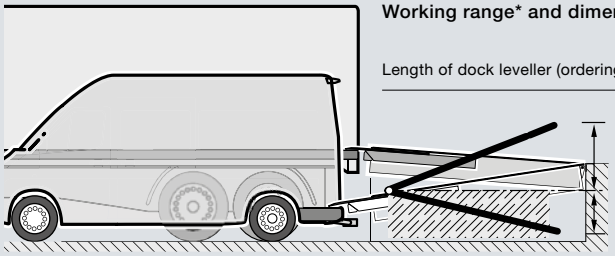

Working range* and dimensions

Length of dock leveller (ordering length)		3000	3500	4000	4500
	+	450	510	570	630
		390	450	510	570
	–	570	540	650	630
		650	600	720	690
Ordering width		2000, 2100, 2250			
Installation height		795	795	895	895

Lip length: with telescopic lip 500 mm with telescopic lip 1000 mm

All dimensions in mm

* With max. 12.5% gradient acc. to EN 1398

Hydraulic loading platform

Combination of telescopic lip dock leveller and scissors table lift

1

2

3

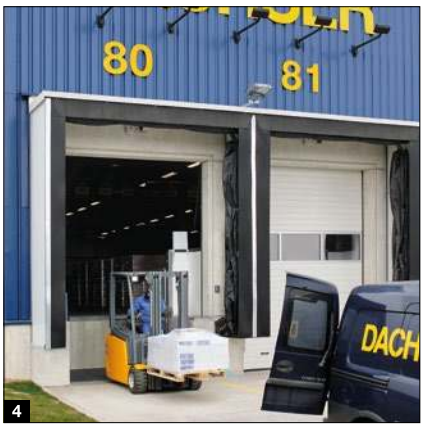

4

Working range* and dimensions

Length of dock leveller (ordering length)	2750	3000
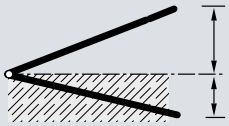 +	340 395	370 430
−	345 395	400 430
Ordering width	2000, 2100, 2250	
Maximum difference in height that can be bridged in its function as a scissors lift table	1250	

Lip length: 500 mm 1000 mm (optional)

All dimensions in mm

* With max. 12.5% gradient acc. to EN 1398

Important:
The pit must be designed in such a way that no pinching and shearing hazard points occur! The area under the lift table must not be accessible. A door in front of the lift leveller down to roadway level or a front protection plate can guarantee this.

Lift levellers

The lift leveller is used to perform two very different functions in the most limited space:

Use as a dock leveller 1

At ramp level, the lift leveller functions like a conventional hydraulic telescopic lip dock leveller: it bridges the distance and any difference in height to the lorry loading surface, thus enabling an efficient loading process.

Use as a scissors lift table 2 3 4

Thanks to the integrated scissors lift table, it is also possible to lift goods from the roadway level to the building floor easily and quickly, or vice versa, to lower them from the building to the roadway level. The function as a dock leveller is blocked in this situation.

IMPORTANT. Transporting persons on the scissors lift table is not permitted! Plan pedestrian passage at close proximity.

DOBO system

Docking before opening

DOBO system in the building

The lorry docks with its doors closed. The doors are positioned inside the hall once the hall door has opened. The following components are required (list is an example and may vary depending on requirements):

- On-site recess in the building floor for the vehicle doors 1
- Dock leveller HTL 2 ISO DOBO-h 2 with 1150 mm long telescopic lip, horizontal home position (cross-traffic possible to a limited extent), alternatively HTL 2 with ISO panel or concrete floor below the dock leveller as well as on-site recess in the building structure to guide the hall door in front of the dock leveller
- External operation DTH-T for optimum visual contact with the dock leveller despite open doors
- Inflatable dock seal DAS 3 DOBO 3 (see page 84)
- Sectional door SPU F 42 or SPU 67 Thermo 4
- Door holders 5 prevent the vehicle doors from swinging back during loading
- Buffers VBV4 or VBV5 (see page 95)
- Docking assistance system HDA-Pro or DAP (see page 98) to prevent damage to the building structure, especially in the area of the on-site recess
- Query of the door open end-of-travel position, e.g. magnetic switch, for the dock leveller release function

NOTE. When planning, pay special attention to the area of travel of the doors.

DOBO system in the building

1 Safe docking
The manoeuvring guides and the Hörmann Docking Assistant HDA-Pro help the driver ensure safe and centred docking. The vehicle doors remain closed. Sensors in the door leaf recognise the position of the vehicle. Alternatively, the DAP docking assistant can be used.

2 Reliable sealing
As soon as the lorry is docked, the dock shelter DAS 3 is inflated and seals the vehicle on three sides.

3 Opening the loading ramp door
After the door is completely opened, the telescopic lip of the dock leveller is extended to decrease the gap to the vehicle.

4 Lowering the buffers
Now the movable buffers VBV4 or VBV5 can be lowered and locked to open the lorry doors.

5 Opening the vehicle doors
The ramp features a recess that provides enough space for the doors to open completely.

6 Extending the dock leveller
The dock leveller HTL 2 with a 1000 mm long telescopic lip easily bridges the gap between the ramp and loading surface and can be precisely positioned up to the last centimetre.

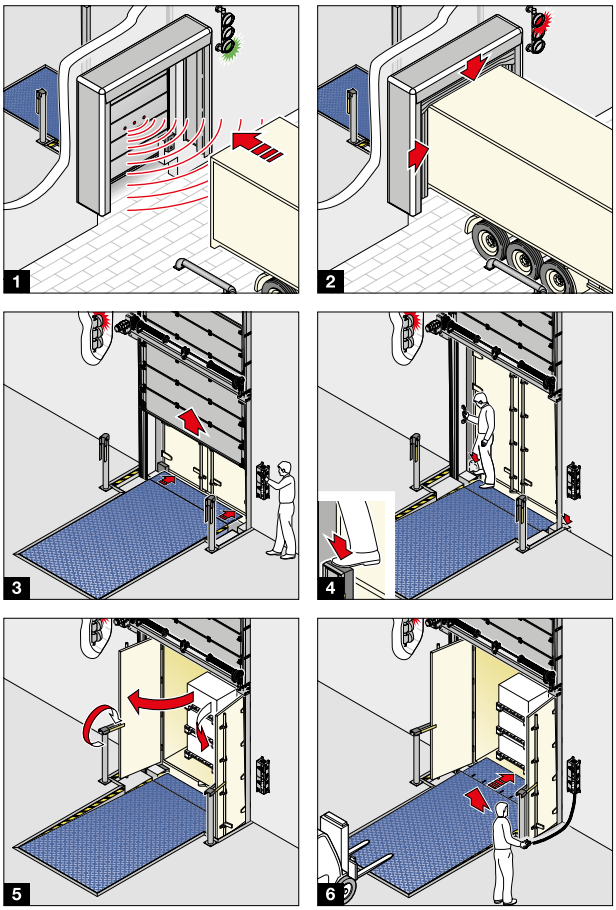

DOBO system

Docking before opening

DOBO system in the loading house

The lorry docks with its doors closed. The doors can be positioned at any time in recesses in the loading platform (dock leveller in low home position). The following components are required (list is an example and may vary depending on requirements):

- Loading platform HRT DOBO-s with recess for the vehicle doors, low home position 1
- External operation DTH-T for optimum visual contact with the dock leveller in the loading house
- Loading house body 2 (see page 74)
- Inflatable dock seal DAS 3 DOBO or DAS 3-L DOBO 3 (see page 84)
- Industrial sectional door SPU F 42 or SPU 67 Thermo as a building door 4
- Door holders 5 prevent the vehicle doors from swinging back during loading
- Buffers VBV4 or VBV5 (see page 95)
- Docking assistance system DAP (see page 98)
- Query of the door open end-of-travel position, e.g. magnetic switch, for the dock leveller release function

NOTE. When planning, pay special attention to the area of travel of the doors.

DOBO system in the loading house

1 Safe docking
The manoeuvring guides and the DAP docking assistance support the driver in centred docking.

2 Reliable sealing
As soon as the lorry is docked, the dock shelter DAS 3 is inflated and seals the vehicle on three sides.

3 Opening the loading ramp door
The door can be fully opened to gain access to the front area of the loading house.

4 Lowering the buffers
Now the movable buffers VBV4 or VBV5 can be lowered and locked to open the lorry doors.

5 Opening the vehicle doors
The ramp features a recess that provides enough space for the doors to open completely.

6 Extending the dock leveller
The telescopic lip dock leveller with a 500 mm long telescopic lip bridges the gap between the ramp and loading surface and can be precisely positioned up to the last centimetre.

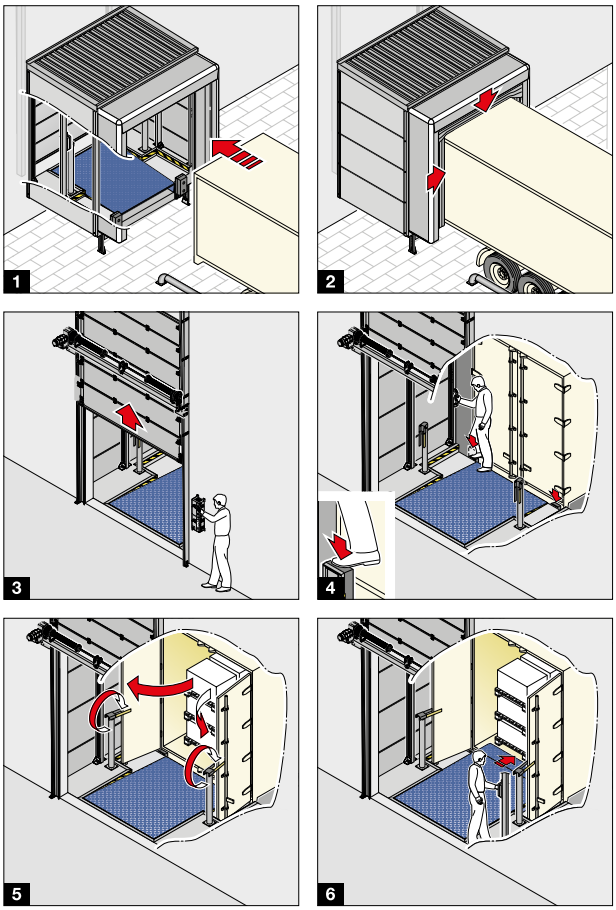

Loading houses

Certified sturdy construction with lean design

DNV·GL

KONFORMITÄTSBESCHEINIGUNG DER WERKSEIGENEN PRODUKTIONSKONTROLLE

Hörmann KG Verkaufsgesellschaft

Hörmann Alkmaar B.V.

EN 1090-1:2009/A1:2011

A static calculation according to EN 1990 is available for all models. Together with the CE label and the online declaration of performance, the conformity of the pedestals and loading houses with the Construction Products Regulation is consistently demonstrated.

Overall construction resistant to working stresses

Hörmann loading houses meet all requirements regarding stability and safety with their narrow design. The proven construction carries a roof load of max. 1 kN/m² or 3 kN/m² and is also recommended for snowier regions. The max. wind load is 0.65 kN/m². Thus, with Hörmann you can plan loading houses simply and safely. For higher requirements, please speak to your Hörmann partner. The frame construction and the steel pedestals of the loading house are certified according to EN 1090, an important condition for meeting the requirements of the Construction Products Regulation. The certificate confirms fulfillment of the requirements such as

- In-factory production control
- Durability
- Dimensioning according to the Eurocode.

Substructure as a dock leveller pedestal combination
The loading platforms HRS 1 and HRT 2 form the optimal base construction for the loading house with dock leveller and side elements as a matched unit. The front plates are already prepared for fitting the buffers. For high-quality corrosion protection in outdoor areas, the HRS or HRT in galvanized design is recommended.
Loading platforms HRS and HRT are available up to 3 m in length and with a rated load of 60 kN. For higher requirements, dock levellers type HLS 2 or HTL 2 are combined with separate pedestals.

Adjustable pedestal feet 3
The height of the loading house pedestal feet can be adjusted to optimally adapt to the building level. This facilitates fitting and also allows any building subsidence to be compensated, even after many years.

Optimum drainage 4
Loading houses are drained to the front with a standard roof slope of 2%. A roof slope of 10% is possible as an option under certain circumstances. On request, a rain gutter can also be fitted to the loading house in conjunction with a drainpipe 5.

Complete with dock shelter 6
A dock shelter complements the base construction and the building structure to produce a complete loading site. It can easily be fitted to the frame construction of the loading house. The solution with an inflatable dock seal, which is integrated well protected in a loading house recess, is particularly energy-efficient, see page 87.

Sealed connection to the building structure
A 50 mm high bottom roof bracket connects the construction with the building structure and ensures a sealed connection. An optional cap strip prevents the entry of rainwater.

Optional self-supporting version
For building facades that cannot accommodate vertical loads, the loading house is available as a self-supporting version. Only wind loads are transferred to the facade.

Space requirements
There is an increased space requirement in the outside area for loading houses.

Arranged at an angle
In limited space, the angular arrangement achieves more room to move for docking.

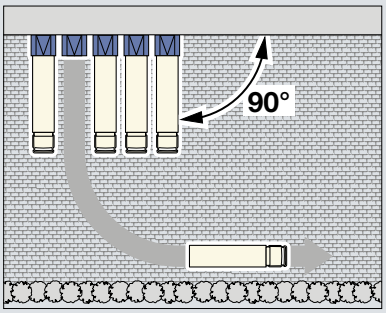

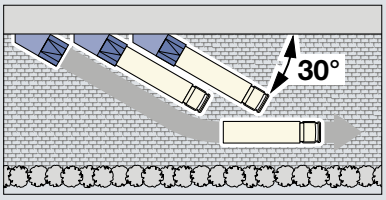

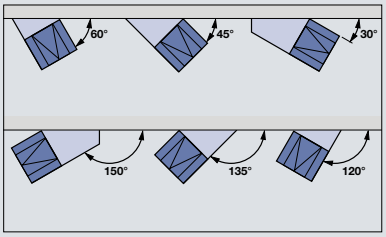

Loading houses

The right version for any requirement

Single-skinned version

Type LHC 2 1

The single-skinned cladding effectively protects staff and goods against adverse weather effects during loading. The max. roof load is 1 kN/m² as standard, optionally 3 kN/m². The inside of the roof can be made condensate-inhibiting on request. For roof loads up to 3 kN/m², the roof is made with sandwich panels and additional condensate-inhibiting equipment is not required.

Double-skinned version

Type LHP 2 with 60 mm thick steel panels 2

The side walls and the roof panel are made of double-skinned 60 mm thick steel panels. Type LHP 2 is particularly recommended in addition to the protection against adverse weather effects to inhibit the noise transmission during loading and to prevent the effects of heat on refrigerated goods due to sunlight. This loading house carries a roof load of up to 3 kN/m² as standard. For an appealing appearance, the side walls are fitted concealed without visible bolts.

Surfaces for LHP 2 side walls and roof panels:

- LL 3
- M8L 4
- M16L 5

Reliable surface protection

Loading house types LHP 2 and LHC 2 are delivered primed, inside in RAL 9002, the side and roof cladding on the outside either in RAL 9002 or 9006. Coloured wall panels are available on request.

Unlimited variety of designs: type LHF 2

Any suitable cladding can be fitted on the frame construction on-site – recommended if the building's facade is also intended to determine the appearance of the loading house. The LHP 2 is designed as standard for horizontal cladding 6. However, it can also be prepared for vertical cladding 7 on request.

1

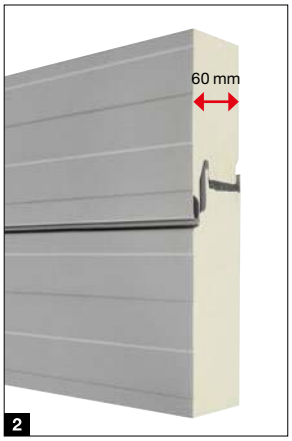

2

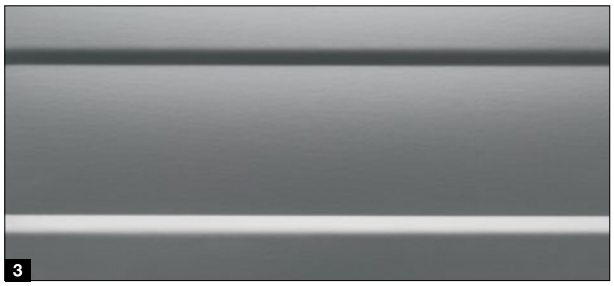
3

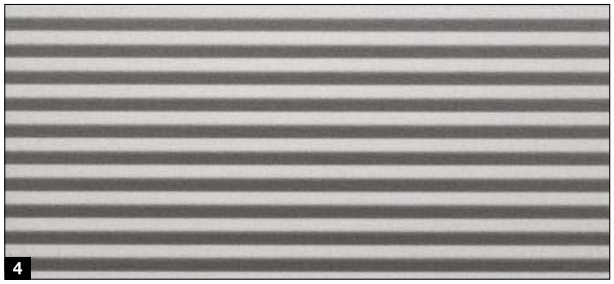
4

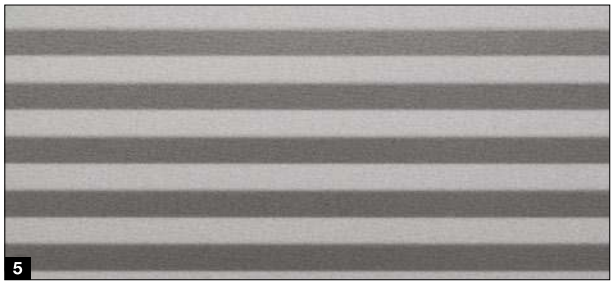
5

6

7

7

8

9

10

Optimum thermal insulation: insulated air lock 7
If the loading house is located directly inside a cooling zone, there are considerably higher requirements for thermal insulation. Hörmann insulated air locks are equipped with an 80 mm thick sandwich cladding in the roof, wall and floor areas. For the front closure, we recommend an industrial sectional door SPU 67 Thermo with a depth of 67 mm.

NOTE. Insulated air locks must be effectively dehumidified. All joints must be professionally and appropriately sealed by a specialist company for cooling and refrigeration technology.

Loading houses with DOBO system 8
A DOBO system can be implemented particularly easily with loading houses as it can be placed in front of the building. The base construction of the DOBO dock leveller with stepped side elements is already prepared for the fitting of a standard loading house.
For further information on the DOBO system, see page 72.

Coupled in-line arrangements 9
With large in-line arrangements, coupled loading houses can provide both an inexpensive and visually appealing alternative under the following conditions:
- Arrangement 90°
- Axis dimension max. 4000 mm (distance middle – middle of dock leveller)

The roof clad with sandwich panels takes loads up to 1.75 kN/m², optionally up to 3 kN/m².

Front door closure 10
In order to protect the loading house from unwanted influences and soiling even outside of loading times, rolling shutter Decotherm SB can be fitted in the front area. A sectional door can also be fitted, but this requires a higher loading house due to the space required for the door guide and possibly also a longer dock leveller.

Flap dock shelters

Flexible and sturdy steel frame construction

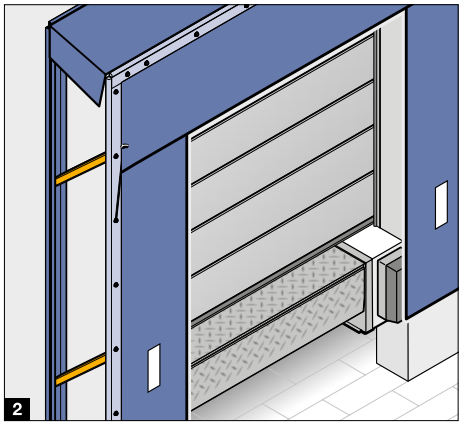

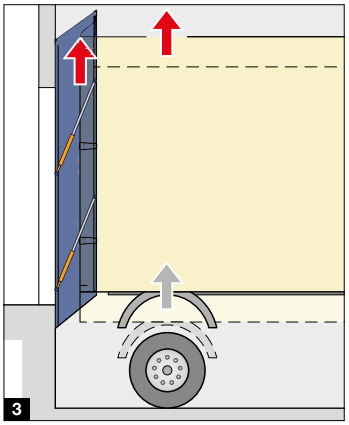

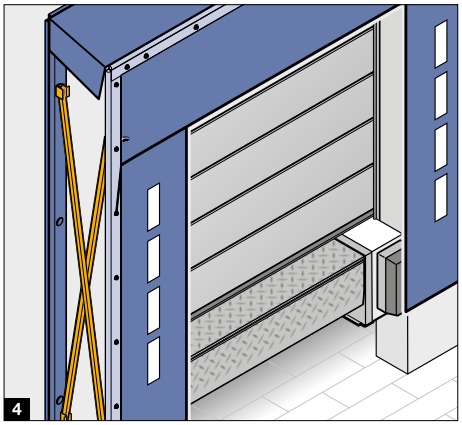

Sturdy steel frame 1
The top and side flaps are fitted on a galvanized steel frame and form a stable and robust overall construction.

Flexible link arm construction 2
The link arm construction is flexible both horizontally and vertically due to its design and the special open profiles. When pushing in the dock shelter, the front frame moves slightly upwards.

Telescopic link arms 3
This optional extras allows the front frame to follow lorry lifting movements. The risk of damage from swap containers that need to be raised for parking or vehicles that pump up after docking is easily minimised with this patented design. The front frame can move upwards up to 250 mm. Telescopic link arms can also be retrofitted.

IMPORTANT. If there are any canopies, ensure sufficient space for movement above the dock shelter.

Robust scissors arm construction 4
The advantage of the scissors arm design lies in its rigidity. It also allows very high or deep versions. The frame construction is pressed in parallel and tightens the cladding again by tension springs after the loading process.

Flaps with spring tension 5
The side and top flaps are made of double-layered, 3 mm thick polyester monofilament thread backing fabric with double-sided PVC coating. In contrast to conventional polyester flaps, the monofilament threads in the tarpaulin material of the side flaps provide considerable pre-tensioning to the rear of the lorry and thus an excellent seal. The side flaps are provided with marking stripes: for link arm versions 1 unit per side, for scissors arm versions 4 units per side, for roadway models 6 units per side.

Drainage
Depending on the version, constructive details in the top part ensure effective drainage of rainwater so that people and goods are protected from large amounts of rainwater.

Top part with inclination 6
The front and rear frame on this construction differ in height. The resultant gradient of 100 mm channels rainwater off to the front edge. The dock shelter can also be equipped with further optional drainage measures, see page 80.

Straight top part with gutter 7
The top cladding of straight top parts is equipped with drainage openings. A water run-off channel drains the rain water towards the side.

7

Tip
Dock models with a size of 3500 × 3500 mm have proven themselves in practice due to their flexibility, as the pressure of the docked lorry can be optimally distributed in the dock shelter. You should therefore factor the space required into the design of the building. For in-line arrangements, consider a sufficiently large distance of at least 100 mm between the dock shelters.

Flap dock shelters

Tailored equipment

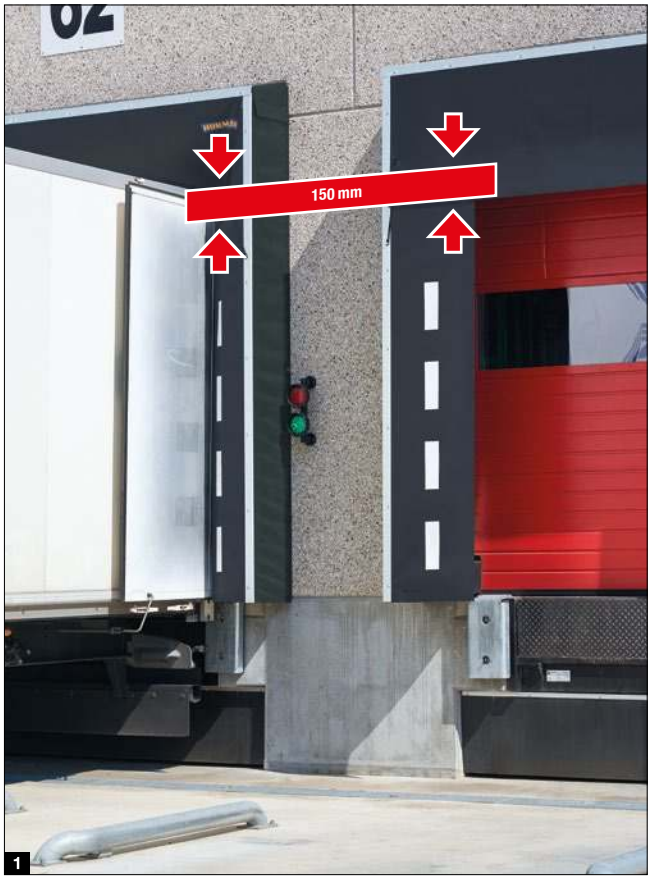

1

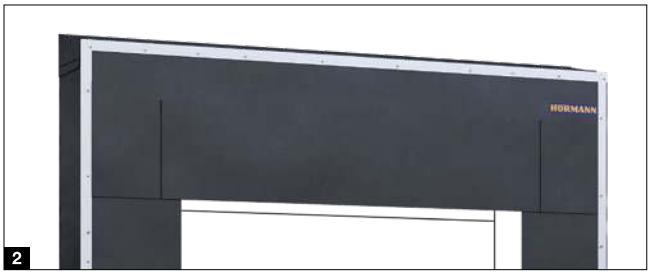

2

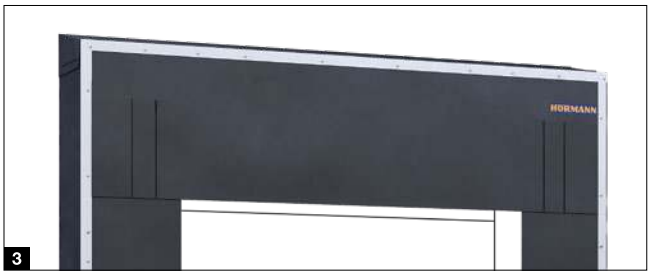

3

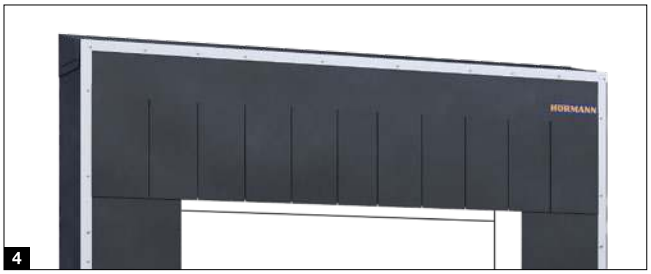

4

Top flaps

For different vehicle heights, flexible top flaps are required. While a long top flap ensures good sealing even with smaller lorries, it hangs over the loading opening of larger vehicles. An overlap of approx. 150 mm is ideal 1.

Versions

To prevent the tension on the top flap from becoming too high for higher vehicles, it can be designed with an incision or with a corner or even full lamination as required.

- Top flap with side incision 2
- Top flap laminated at the corners 3
- Fully laminated top flap, 100% overlapping 4

Numbers on the top flap 5

On request, we can supply the top flaps with a number in the colour of the marking stripes.

Water drainage channel 6

For dock shelters that are not located under a canopy, higher drainage requirements may apply. This applies in particular to high facades and long stoppage times. The top part of a DSL or DSS(-G) dock shelter can be equipped with a water drainage channel in addition to the inclination. Dock shelters with straight top part DSLR, DSSR(-G) are equipped with a water drainage channel as standard.

Corner cushions 7

The optional corner cushions are practically a must for any flap dock shelter. Due to their height and shape, they significantly improve the sealing at the bottom of the dock shelter between wall connection and flap.

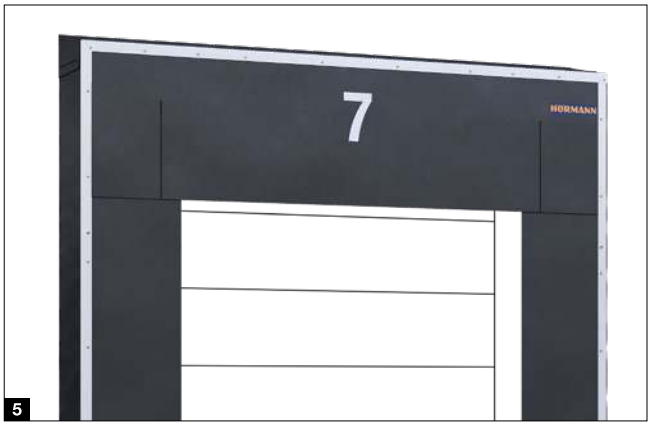

5

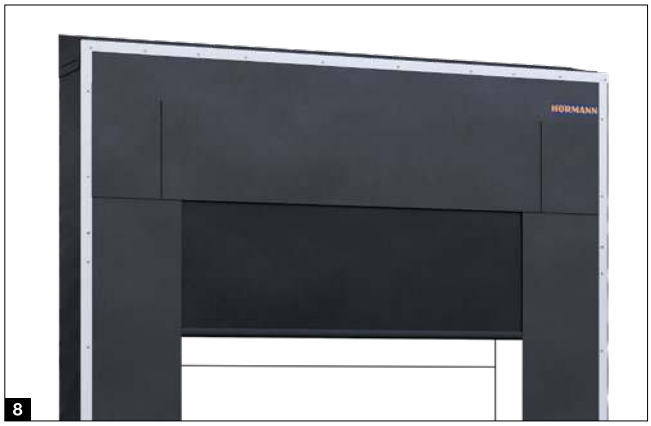

8

6

7

9

Roll-up flaps 8

In places where small vehicles, such as delivery vans, occasionally dock, an additional roll-up flap makes sense. It is electrically driven and can be lowered onto the vehicle roof after docking, if required.

Bottom flap for roadway version 9

An optimal seal at the bottom edge of the lorry is provided by the removable bottom flap, which is hung on the rear frame of the dock shelter.

Colours

Top and side flaps		
Graphite black, similar to RAL 9011	1	●
Basalt grey, similar to RAL 7012	2	○
Gentian blue, similar to RAL 5010	3	○
Side cladding		
Graphite black, similar to RAL 9011	1	●
Basalt grey, similar to RAL 7012	2	○
Gentian blue, similar to RAL 5010	3	○
Marking stripes		
White	4	●
Yellow	5	○
Orange	6	○
Red	7	○

● = Standard ○ = Optional, not for DDF

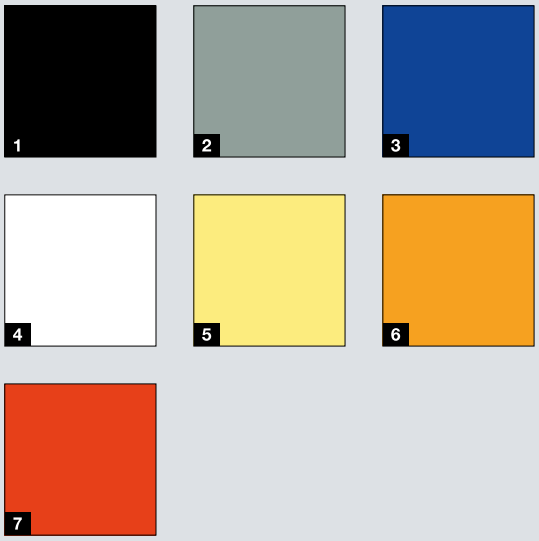

Flap dock shelters

A wide range of options

Versions	DSL	DSLR	DSS	DSSR	DSN	DSS-G	DSSR-G	DSN-G
Dock model	●	●	●	●	●			
Roadway model						●	●	●
Link arm	●	●						
Scissors arm			●	●		●	●	
Recess fitting					●			●
Top part with inclination	●		●			●		
Straight top part		●		●			●	
Marking stripes, number per side	1	1	4	4	1	6	6	4
Fitting under canopy	●		●			●		

Ordering width	Side flap width	Front opening width							
2800	600	1600							
	700	1400							
3000	600	1800							
	700	1600							
3350	600	2150				2150			
	700	1950				1950			
3500	600	2300				2300			
	700	2100				2100			

Ordering height	Top flap height*	Front opening height							
2800	900	1800	1900						
	1000	1700	1800						
	1200	1500	1600						
3000	900	2000	2100						
	1000	1900	2000						
	1200	1700	1800						
3500	900	2500	2600	2500	2600	2500			
	1000	2400	2500	2400	2500	2400			
	1200	2200	2300	2200	2300	2200			
3750	900	2750	2850	2750	2850	2750			
	1000	2650	2750	2650	2750	2650			
	1200	2450	2550	2450	2550	2450			
4500	900						3500	3600	
	1000						3400	3500	
	1200						3200	3300	

Depths								
500	●	●	●	●		●	●	
600	○	○	○	○		○	○	
900	○		○			○		

● = Standard ○ = Optional

* Optionally available from a height of 500 mm

Special sizes on request

All dimensions in mm

Flap dock shelter DDF 10 with side cushions and lifting roof

With particularly tear-resistant flaps on foam-filled side cushions, the DDF 10 dock shelter is an alternative to the flap dock shelter with link or scissors arms. The investment pays off: side cushions are simply compressed in the case of inexact docking or move off to the side. The side flaps are fastened to the side cushions with Velcro. This allows for simple and inexpensive exchange in case of damage. The top part is upwardly mobile 1 2, i.e. it can move upwards approx. 550 mm when a docked vehicle is raised up.

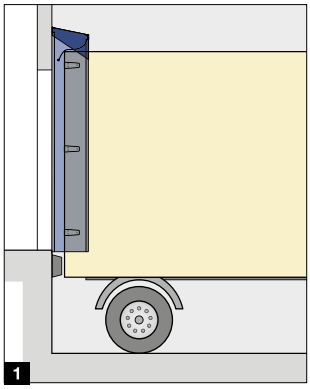

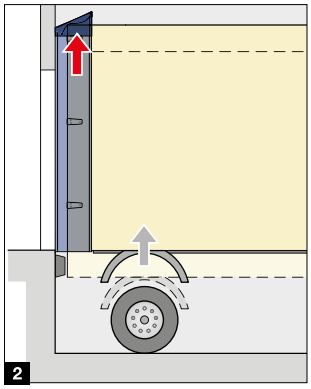

Versions	DDF 10
Dock model	●
Side cushion	●
Lifting roof	●
White marking stripes, number per side	1
Fitting under canopy	●

Ordering widths	Side flap width	Front opening width	Suitable for loading houses
3300	600	2100	–
3400	600	2200	–
3500	600	2300	●

Ordering height	Top flap height	Front opening height
3500	900	2450

● = Standard ○ = Optional

Special sizes on request

All dimensions in mm

Inflatable dock seals

For the highest visual and technical requirements

Frame construction 1
The roof and side claddings made of insulated, 20 mm thick steel panels are available either in White aluminium RAL 9006 or Grey white RAL 9002, with anodised aluminium corner profiles with a rounded softline look.

Flap and fabric 2
The flap strips made of double-layered, 3 mm-thick polyester monofilament thread backing fabric with double-sided PVC coating protect the cushions in home position. The cushions are made of weather-resistant, high-frequency-sealed tarpaulin material in Graphite black, RAL 9011.

Inflatable top and side cushions 3
In the home position, the inflatable cushions are almost invisible. When docking, there is no contact with the lorry. As a result, slightly inaccurate docking does not necessarily lead to damage to the dock seal.
IMPORTANT. The proper cushion dimension ensures optimum sealing. The length of the top cushion and the width of the side cushions must be sufficient to exert some pressure on the docked lorry (special sizes are possible). On the other hand, they must not be so long or wide as to deform when being pushed in.

Optimum front opening in the working position
- Width 200 mm less than the vehicle width
- Height 100 mm less than the vehicle height

Side cushions that are too wide are a particular problem with the DOBO system. They might shift backwards and push against the open lorry doors. This could impair loading and even result in a hazard.

Roll-up flap 4
As an alternative to the top cushion, an electric roll-up flap offers more flexibility at different vehicle heights. Type RCH is 2 m long and is lowered in press-and-hold operation. The 3 m long RCP version is operated simultaneously with the side cushions in impulse operation and follows the vehicle even if it sags. This ensures a constant, good seal.

Blower
The high-power blower is in operation during the entire loading process and thereby guarantees a consistent seal. A 1-phase 230 V supply line is required for connection. After switching off, the cushions quickly retract through internal tensioning cables and counterweights.

Operation
The inflatable dock seal can be conveniently operated with the comfort dock leveller control 460. Integration in automated processes is also easy. Alternatively, operation via a switch is possible.

Numbers 5
On request, the top flap can be equipped with numbers to mark the loading ramp.

Marking stripes 6
On request, the side flaps have three white marking stripes on each side.

Corner cushions
The DAS 3 is fitted with foam-filled corner cushions as standard for sealing in the bottom section, between the wall connection and the side cushions 7.
Inflatable corner cushions are optionally 8 available (as standard for DOBO versions). These offer an even better sealing to the lorry. As they have no contact with the docking lorry in home position, they are less susceptible to wear.

Inflatable dock seals

Versions and equipment options

Dock shelter DAS 3: dock model 1

Only after the lorry has docked does the blower inflate the dock seal around the vehicle, fully sealing the loading space within a few seconds. This dock seal is particularly recommended for cold stores and extended loading times. The optional Crash Protection Bar 2 protects the frame construction from impact damage. This equipment is standard with the version with 1200 mm depth.

Standard size: 3600 × 3550 mm (W × H), depth 850 mm, optionally 1200 mm
Inflated front opening: 2400 × 2550 mm (W × H)
Front opening in the home position: 3100 × 3150 mm (W × H)

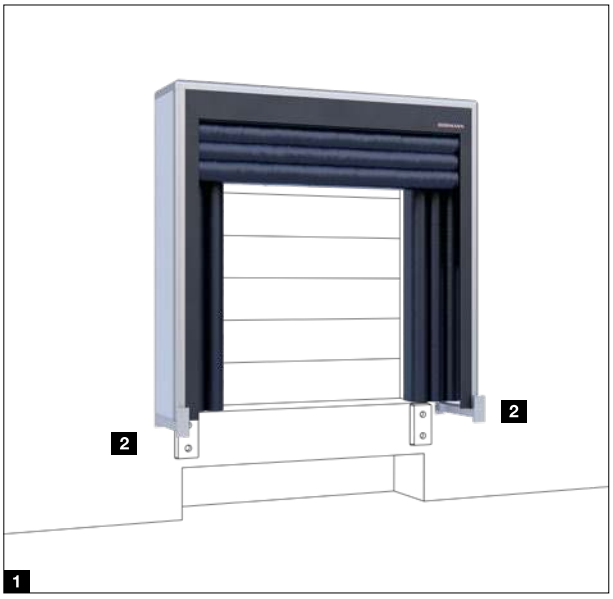

Dock seal DAS 3 DOBO: dock model 3

For the DOBO system, the dock seal is made longer and fitted at the height of the recess for the movement of the vehicle doors. It is also equipped with inflatable corner cushions.

Standard size: 3600 × 3850 mm (W × H), depth 850 mm, optionally 1200 mm
Inflated front opening: 2400 × 2850 mm (W × H)
Front opening in the home position: 3100 × 3450 mm (W × H)

Dock seal DAS-G3: roadway model 4

When the cushions are not inflated, the roadway model allows unimpeded passage into the building.

Standard size: 3600 × 4700 mm (W ×), depth 850 mm
Inflated front opening: 2400 × 3700 mm (W × H)
Front opening in the home position: 3100 × 4300 mm (W × H)

5

6

7

Dock seal DAS 3-N: recess version 5

Fitted in a recess, inflatable dock seals are particularly well protected against rainwater and snow loads.

Standard size: 3600 × 3550 mm (W × H)
Inflated front opening: 2400 × 2550 mm (W × H)
Front opening in the home position: 3100 × 3150 mm (W × H)

Dock seal DAS 3-L: for loading houses 6

The recess version DAS3-L is intended for integration in a loading house with recess. The result is a visually appealing combination in which the dock seal is optimally protected against rainwater and snow loads.

Standard size: 3600 × 3550 mm (W × H)
Inflated front opening: 2400 × 2550 mm (W × H)
Front opening in the home position: 3100 × 3150 mm (W × H)

Dock seal DAK 3: with fixed side cushions 7

The DAK 3 is the advantageous combination of solid side cushions and inflatable top cushion with cladding made of thermally insulated, 20 mm-thick steel panels. This dock seal is particularly recommended for hanging goods with a standardised vehicle fleet. The foam-filled side cushions seal perfectly at the sides. On top the inflatable top cushion keeps the loading opening completely free to directly forward the goods on conveyor systems.

Standard size: 3600 × 3500 × 350 / 850 mm (W × H × D)
with inflated top cushion: 2400 × 2500 mm (W × H)
Front opening in the home position: 2400 × 3100 mm (W × H)

Cushion dock seals

Versions and details

1

2

Cushion dock seals offer excellent sealing options for standardised vehicle dimensions. In addition to the fit, two other aspects are important during planning: Cushion dock seals not only seal the transition from the rear of the lorry to the building, but also the air gap between the lorry and the open door. The lorry pushes into the cushion, making the cushions protrude into the loading opening. Cushion dock seals are therefore not suitable for lorries with top flap.

Type DFH 1

In this version with solid side and top cushions, the lorry drives against the foam cushions for loading and unloading with doors already open.

Standard size: 2800 × 2500 × 250 mm (W × H × D)
Front opening: 2200 × 2200 mm (W × H), with chamfered cushions 2040 or 1900 × 2200 mm (W × H)

Type DFC 2

This dock seal with solid side cushions and top cushion with additional top flap is suitable for smaller lorries with different body heights and for buildings with high loading doors.

Standard size: 2800 × 3000 × 250 mm (W × H × D)
Front opening: 2200 × 2200 mm (W × H), with chamfered cushions 2040 or 1900 × 2200 mm (W × H)

Buffers

When docking 3, the cushions must not be pressed in more than 50 mm to prevent damage by excessive compression pressure. Therefore it is important that the depth of the buffers has the right proportion to the depth of the cushions. The difference can be easily compensated by using buffer brackets. Consider the resulting increased distance between the vehicle and the ramp when choosing the lip length of a dock leveller, if necessary.

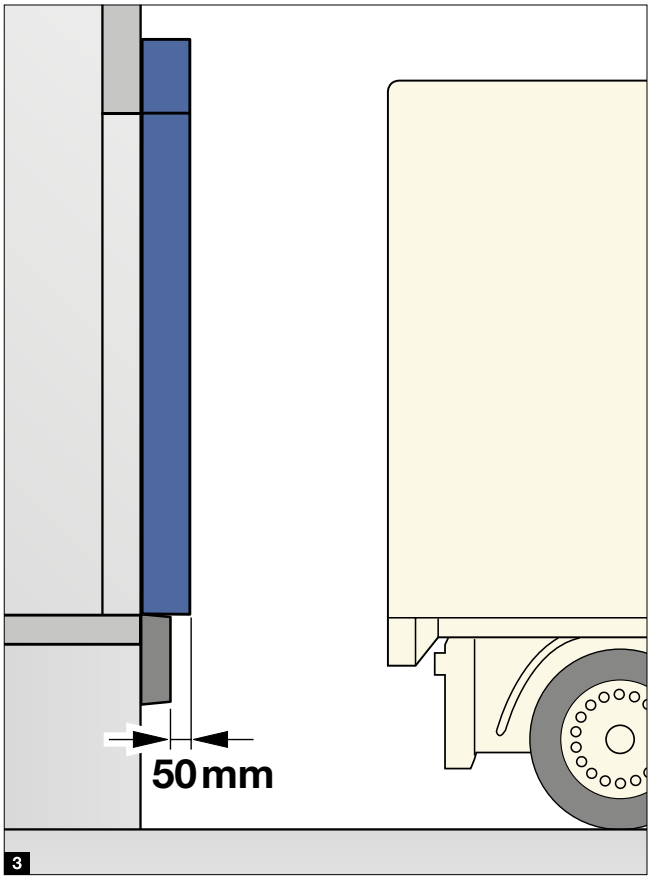

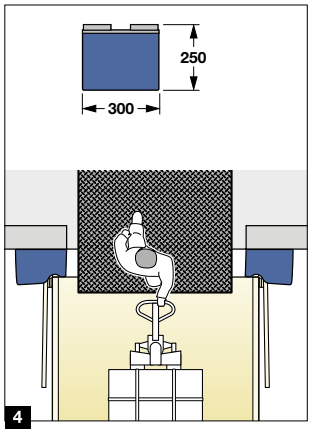

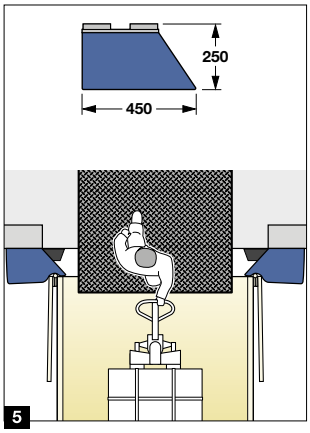

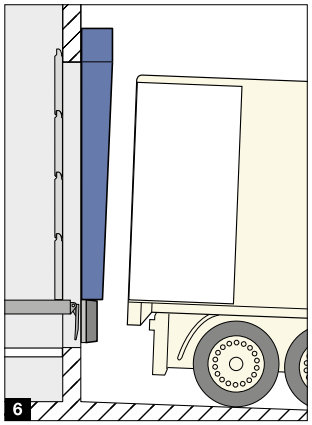

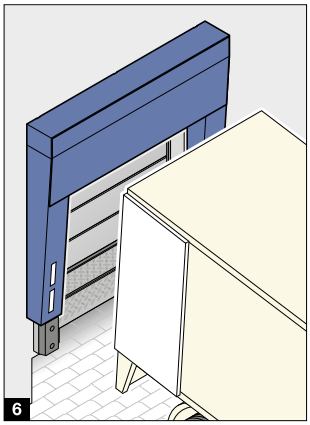

Cushions

The cushions are filled with PU foam. Together with the sturdy base frame and the high-quality cover made of textile-reinforced plastic flaps, the cushions form a durable unit. The vertical cushions are either rectangular 4 or chamfered 5. Chamfered cushions are a simple solution if the existing door is too wide. Special shapes are also available 6 if required. If the roadway slopes, for example, cushion designs with a compensating upward or downward tapering inclination are possible as required.

Colours

Top and side flaps		
Graphite black, similar to RAL 9011	1	●
Marking stripes		
White	2	●
Yellow	3	○
Orange	4	○
Red	5	○

● = Standard ○ = Optional

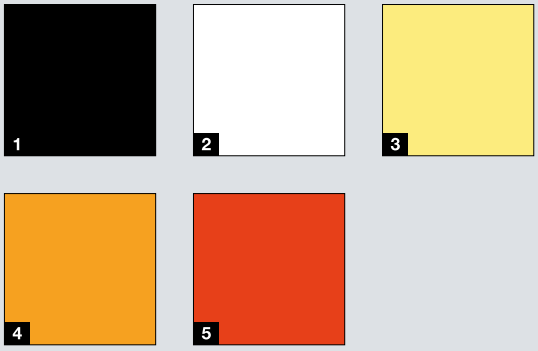

Cushion dock seals BBS

Special solutions for parcel services and delivery vans

1

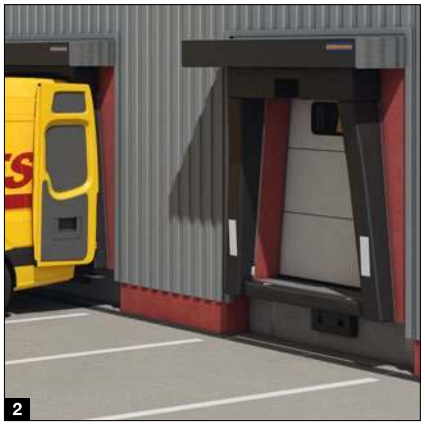

2

3

4

5

The special rear shapes of small transport vehicles, e.g. parcel vans, require individual solutions. The cushion dock seal BBS 1 was developed specifically to suit the rear shape of the Mercedes Sprinter (from year of manufacture 2006) and the identically constructed VW Crafter (up to year of manufacture 2017). Of course, the BBS dock seal is available for the current models and in other versions. Do you need an individual solution for your fleet? Please contact us.
The foam-filled cushions 2 allow optimal sealing, both for revolving doors with 180° and 270° opening angle.
The top cushion 3 has a recess for damage-free docking of vehicles with a rear camera. The top cushion can be fitted with the recess facing down or up, depending on the position of the camera. A version without recess is also possible.

On request, the space between the ramp and the vehicle can be optimally sealed with the DUC bottom cushion 4. As an alternative to the DUC bottom cushion, the GD1 rubber ramp profile protects the ramp edge. The depth of 70 – 75 mm (depending on the type of fitting) provides enough space between the vehicle and GD1 to place the stop bracket of a mobile dock leveller.
For uncovered loading bays 5, the DWC protective cover is available.

Ordering size 1600 / 1970 × 2250 × 190 / 350 mm (W × H × D)
Front opening 1200 / 1540 × 1800 mm (W × H)

Tip

Plan a ramp height of 650 mm to match the relatively low loading surface height.

If all ramps are supposed to be at the same height, adjusting the roadway level is a good solution to accommodate the different loading surface heights.

For vehicles with a rear step, we recommend a tailboard slot with low depth at the loading site. A buffer, e.g. DB 15, is attached in the tailboard slot. Adjust the depth of the tailboard slot and buffer to the step. When the step reaches the buffer, the cushions of the dock shelter should not be pushed in more than 50 mm.

Buffers

Absorption and long service life

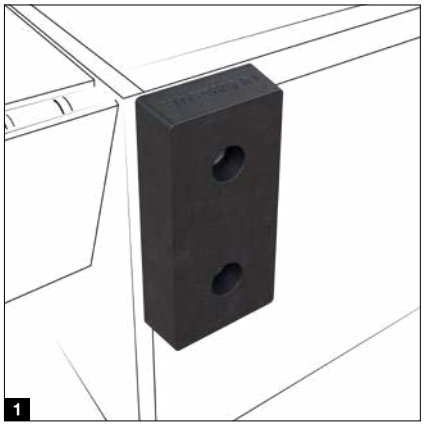

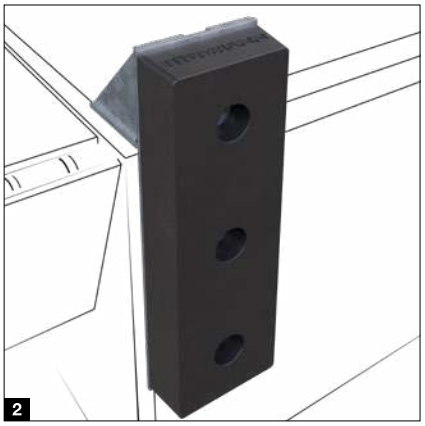

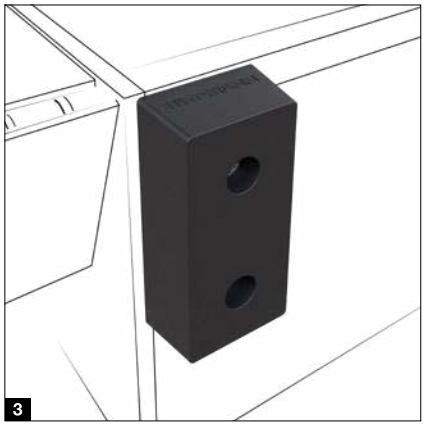

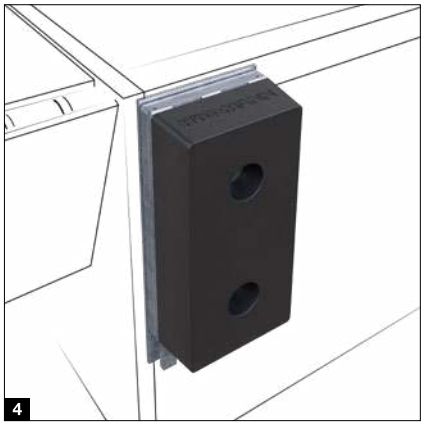

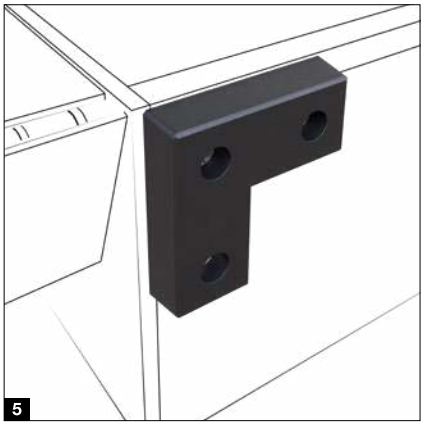

Rubber buffers

DB 15 1

This version is best suited to most loading bays due to the size, depth and quality.

DB 15 XL 2

This extra long buffer is designed to be fitted on a raised BCV XL support bracket and, depending on the design of the support bracket, also provides docking space 100 to 300 mm above ramp level.

DB 20 3

The slightly larger depth creates a greater distance between the vehicle and building. In addition, increased material thickness provides better absorption and durability.

NOTE. When choosing a DB 20, check whether sufficient positioning depth for the lip of the dock leveller remains on the loading surface, especially for dock levellers with hinged lip.

VB 2 4

These buffers offer flexibility that protects your building. When vehicles remain docked close to the buffers, loading and unloading due to the lorry's movements creates forces that cause increased wear on the buffers. The VB 2 has two effects: it dampens the horizontal docking forces as a buffer and, with its vertical movement, lowers the frictional forces of the moving lorry by moving parallel. The rubber buffer can slide 100 mm up and down in a vertical direction on a support bracket for this purpose.

DB 25 5

Buffers are ideal for loading points with dock seal DAK 3.

DB 11 6

For small vehicles or as collision protection on and in the building, buffers of this size are recommended. We do not recommend these versions for docking lorries.

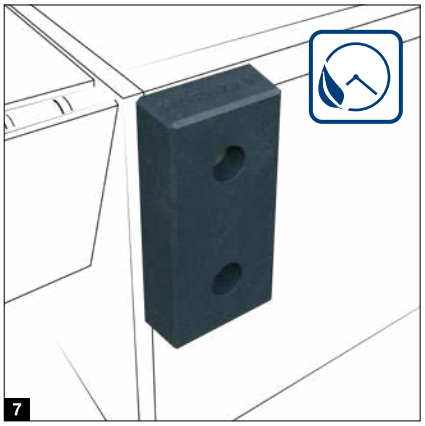

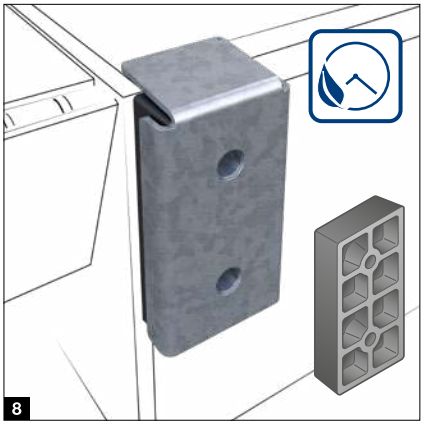

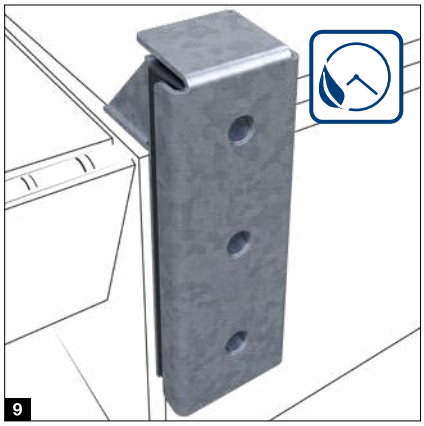

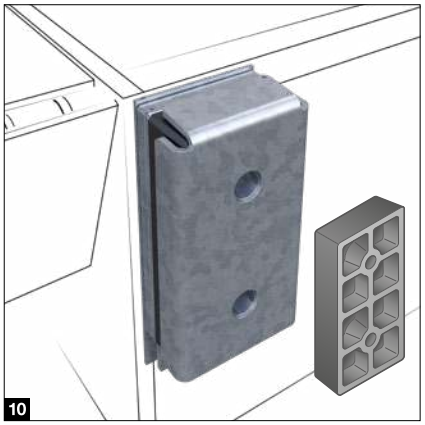

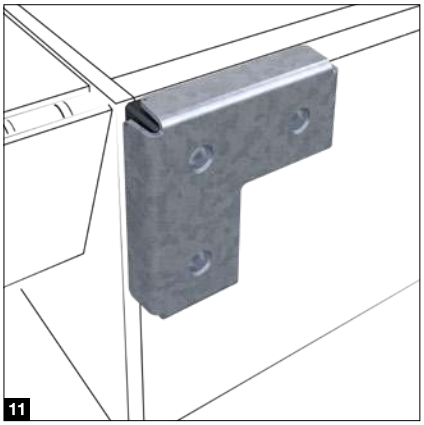

Extremely long service life

PU buffers

DB 15 PU 7

This version has the same dimensions as the rubber DB 15, but is much more resistant to wear. The DB 15 PU is 6 times more resistant to abrasion according to ISO 4649 than a rubber buffer.

Steel buffers

SB 15 and SB 20 8

Where buffers are subjected to extreme stress and conventional buffers would be destroyed too quickly, Hörmann steel buffers with full-surface absorption are the right choice. The angled protective front plate on the buffer distributes the force from the approaching lorry evenly over the entire surface of the buffer and effectively protects it from wear. The special feature of the SB 15 and SB 20: Behind the steel plate, a so-called “octabuffer” with eight air chambers ensures very good absorbing properties.

SB 15 XL 9

The extra long combination of full-rubber buffer and angled protective front plate is, like the DB 15 XL, designed to be fitted on a raised BCV XL support bracket and, depending on the design of the support bracket, also provides docking space of up to 300 mm above ramp level. Important: The building structure must be sufficiently statically dimensioned, continuous and, above all, exactly right-angled in order to be able to transfer the docking forces properly.

SBM 10

This steel buffer can slide 100 mm up and down in a vertical direction on a support bracket, like the VB 2.

SB 25 11

Steel buffers are also available in angled form. Note that with this version, the full-rubber buffers behind the steel plate deform less and therefore greater force is transferred into the building structure. For this reason, the building structure must be sufficiently statically dimensioned.

Mounting plates and mounting brackets

For optimum fastening of buffers on the building

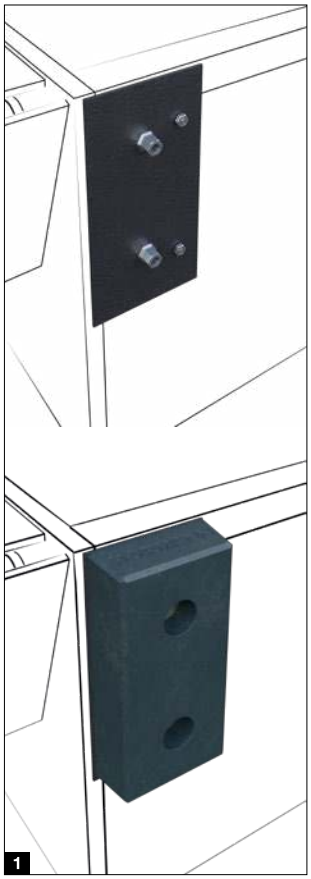

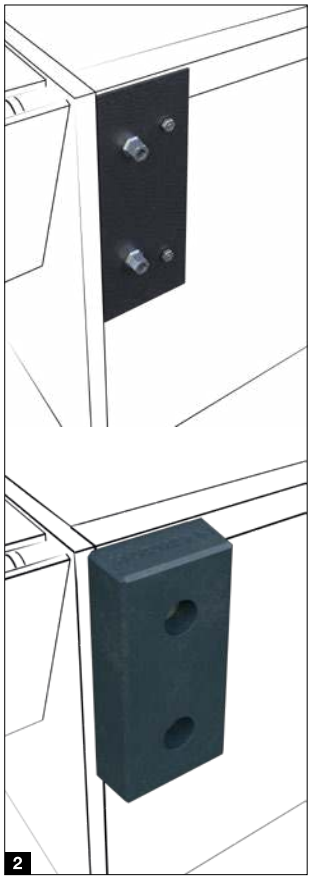

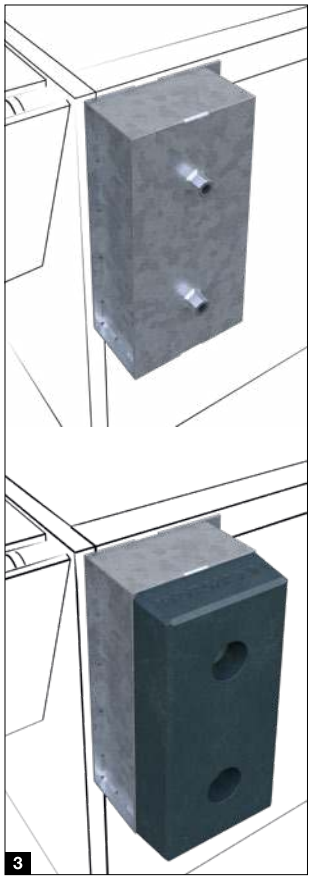

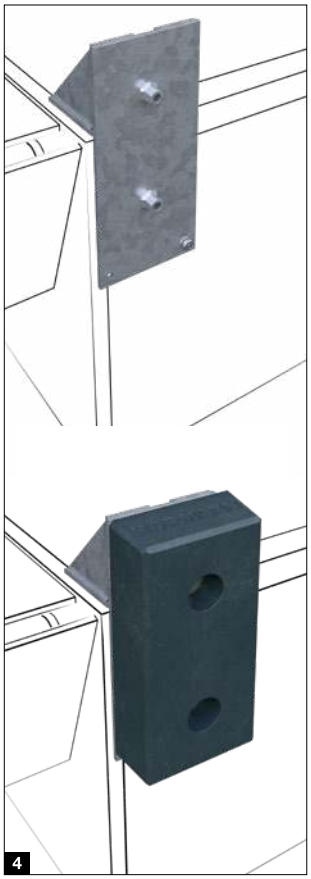

Mounting plates

BMP DB, 250 × 500 mm 1

For buffers DB 15 (PU), DB 20, SB 15, SB 20

Mounting plates are recommended for optimum fastening of buffers on new constructions. But they are also suitable for renovation, e.g. if damage has occurred to the building structure.

BMPS DB, 195 × 500 mm 2

For buffers DB 15 (PU), DB 20, SB 15, SB 20

This version is the optimal solution if the edge bracket of the dock leveller frame is positioned on the building structure. The 5 mm thick mounting plate is fitted next to the edge bracket and thus prevents the docking forces from being transferred to the base frame.

Mounting brackets

BCH 3

For buffers DB 15 (PU), DB 20, SB 15, SB 20

The BCH increases the space between building and vehicle. It is available in various depths and is often used in conjunction with tailboards. In combination with cushion dock seals, they ensure that the cushions are not pushed in excessively. If the slope is inclined towards the building and the door opening is small, a greater distance may be needed to prevent the lorry from hitting the top of the building. Make sure there is sufficient support for the lip or sufficient lip length of the dock leveller.

On request, we can also supply special versions, e.g. to create a safety zone between the ramp and vehicle.

BCV and BCV XL 4

For buffers DB 15 (PU), DB 20, SB 15, SB 20 as well as DB 15 XL, SB 15 XL

The buffer can be positioned up to 300 mm higher with the BCV support bracket, depending on the version. The flush connection to both contact surfaces of the building structure and a reliable fixing are particularly important here, so that the building structure does not break away. Preferably use rubber buffers.

Tip

Attach an edge guard sized at least 50 × 50 × 5 mm in the area of the buffers. This way, you can reduce the risk of damaging the building structure through docking forces.

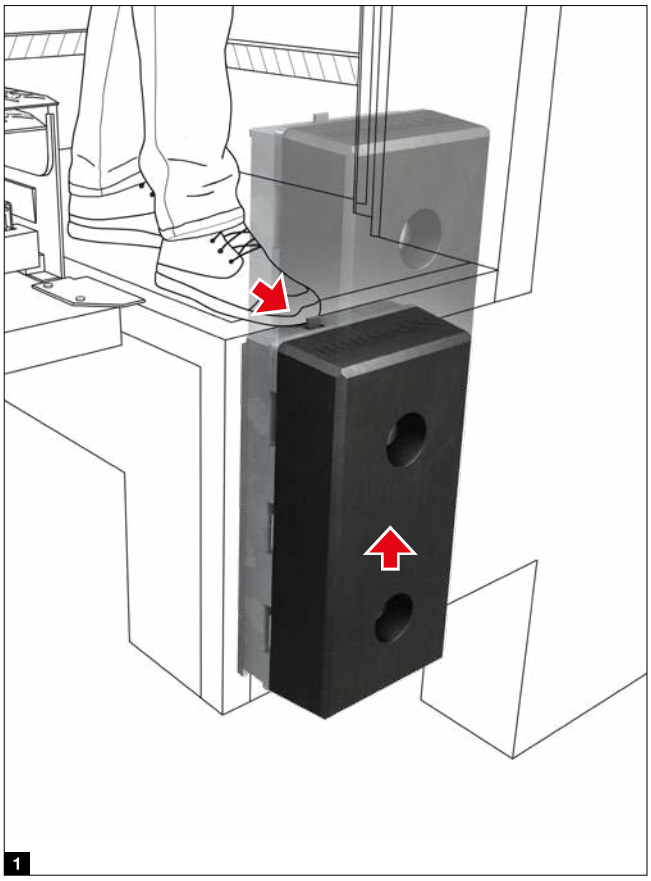

1

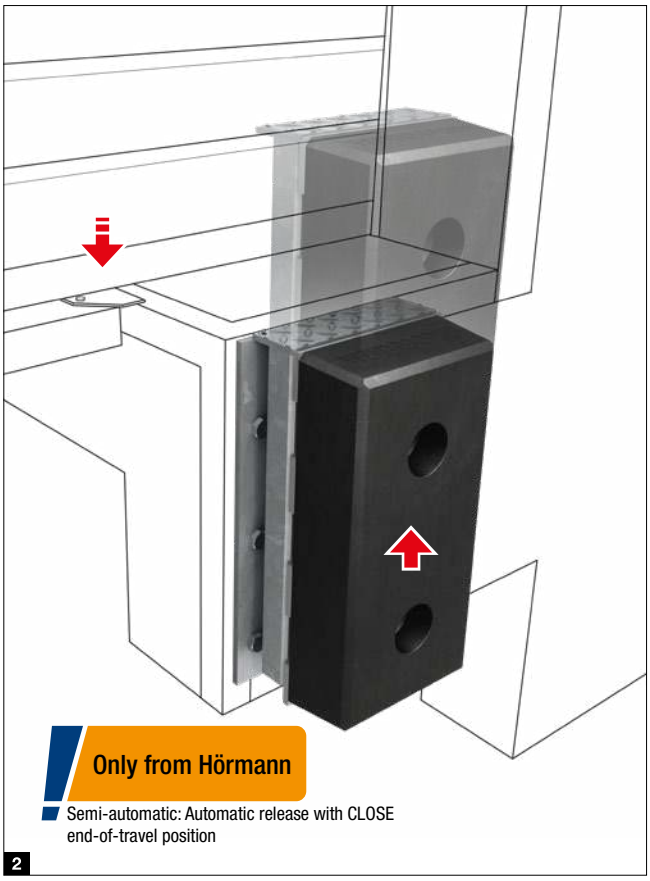

2

Buffers

VBV4 1

The PU buffer can be moved 250 mm on the sliding bracket under spring load. It is at the standard level when docking and can then be pressed down to a lower level and locked so that the lorry doors can be opened. After the loading process, the buffer is released using the foot. The VBV4 is used exclusively with the DOBO system, see page 70.

In addition to the buffer and the support bracket, the scope of delivery also includes a handle for a secure stand when the buffer is pressed down.

VBV5 2

Similar to the VBV4, the VBV5 buffer can be moved 250 mm on the sliding bracket under spring load. However, it has an automatic release: as soon as the door is closed, the buffer springs back into the starting position. This always guarantees the correct position during docking. The advantage over fully automated systems: There are no unexpected buffer movements with the door open. The VBV5 can be used as a spring-loaded buffer and for approaching above ramp level. The VBV5 is also particularly suitable for the DOBO system, see page 70. The patented VBV5 system has electronically assisted gas spring hydraulics. It can be equipped with its own control or simply be connected to a dock leveller control 560 S / T / V.

Buffers

Programme overview

The range of Hörmann buffers is as compact as it is high-quality and has the right solution for every requirement. The buffers, mounting plates and support brackets are suitable for docking forces up to 100 kN.

Buffers	DB 11	DB 15	DB 15 XL	DB 20	VB 2	DB 25
Spring / absorption	★	★★★	★★★	★★★★	★★★	★★★
Service life	★	★★★	★★★	★★★	★★★★	★★★
Investment costs	★	★★	★★	★★	★★★★	★★

Legend: ★ low to ★★★★★ high

Buffers	DB 11	DB 15	DB 15 XL	DB 20	VB 2	DB 25
Dimensions	80 × 490 × 90	250 × 500 × 100	250 × 750 × 100	250 × 500 × 140	250 × 595 × 149	450 / 180 × 100
Rubber buffer	●	●	●	●	●	●
PU buffer						
Steel buffer						
Suitable for loading platforms	Small vehicles only	●	●	●	●	●
Movable					●	
Docking above level		with BCV	with BCV XL	with BCV		
Suitable for the DOBO system						
Fitting to cast bolt sleeves in concrete		●		●	●	●
Fitting on concrete with bolt anchors	●	●	with BCV XL	●	●	●
Fitting on steel pedestal		●	with BVC XL	●	●	●
Fitting on mounting plate BMP / BMPS		●		●		
Suitable for fitting on BCH		●		●		

Horizontal buffer brackets	BCH
Support bracket depth	45 – 65 – 85 – 105 – 150 – 200 – 300 – 360 – 400 – 500 – 520
Fitting	exclusively on concrete

Vertical buffer brackets	BCV / BCV XL
Fitting height above pedestal level	100 – 120 – 150 – 200 – 250 – 300
Fitting	on concrete, pedestal

All dimensions in mm

DB 15 PU	VBV4	VBV5	SB 15	SB 20	SB 15 XL	SBM	SB 25
★★★★	★★★★	★★★★	★★★★	★★★★★	★★	★★★★	★★
★★★★	★★★★	★★★★	★★★★★	★★★★★	★★★★★	★★★★★	★★★★★
★★★	★★★★	★★★★★	★★★	★★★	★★★★	★★★★	★★★★

DB 15 PU	VBV4	VBV5	SB 15	SB 20	SB 15 XL	SBM	SB 25
250 × 500 × 100	250 × 682 × 165	250 × 682 × 195	277 × 518 × 112	277 × 518 × 152	277 × 768 × 112	277 × 610 × 161	490 / 220 × 490 / 220 × 115
●	●	●					
			with octabuffer	with octabuffer	●	with octabuffer	●
●	●	●	●	●	●	●	●
	●	●				●	
with BCV	●	●	with BCV	with BCV	with BCV XL		
	●	●					
●	●	●	●	●		●	●
●	Chemical anchors	Chemical anchors	●	●		●	●
●	●	●	●	●		●	●
●			●	●			
●			●	●			

Docking assistance

Targeted and safe docking

Docking assistance systems

Docking assistance systems protect against impact damage. They carefully guide the lorry driver to the ramp by means of warning lights so that the driver can slow down the approach speed in a targeted manner.

Docking phases:

- Green warning light:
  vehicle can dock A
- Yellow warning light:
  vehicle is approaching the docking position B
- Red warning light:
  docking position reached C

Docking assistance DAP

Depending on the requirement, the robust arm of the DAP system is equipped with one or two photocells, which detect the distance of the vehicle. When equipped with 2 photocells, the warning light first switches from green to yellow when approaching the ramp. The docking position is reached as soon as the warning light turns red. Optionally, a warning light can be used to indicate that the door can be opened if there is no view from the inside to the outside. To ensure that drivers know when they can safely leave the ramp after loading, they receive a green signal as soon as the door is closed again. The switching range of the DAP is adjustable. We recommend a switching range from green to yellow between 500 and 1000 mm in front of the ramp and to red between 50 and 100 mm. The arm has a length of 500 mm; length of 1000 mm on request, e.g. for buffer brackets.

In conjunction with dock leveller control 560 S / 560 T / 560 V, no additional control is required. Otherwise there are 2 controls to choose from:

Control DAPC 1

The DAP system in combination with the DAPC control allows the following equipment to be connected:

- Warning light, exterior and interior, 230 V
- Warning light, exterior, 24 V (with additional connection relay, on the arm of the DAP directly on request)
- Inflatable dock seal for automated activation and deactivation
- Release function, e.g. so that the door can only be opened when the docking position is reached and secured D

Control MWBC 2

The DAP system in combination with the MWBC control is recommended especially for connecting a wheel chock or a wheel-blocking system. After docking, the lorry has to be secured before the door can be opened E. After the loading process, the driver first receives a yellow signal to remove the wheel chock or release the wheel blocking. Only then does a green light signal that the loading site can be vacated. LED lights on the control indicate the status at any time. On request, it is also possible to connect an alarm horn that emits an acoustic warning in case of malfunction.

Docking Assistant HDA-Pro 3

With this docking support system, the door leaf is equipped with several sensors that detect the rear of the lorry. Since the lorry is detected only when the rear doors are closed, this solution is only suitable for the DOBO system. Further information can be found starting on page 70.

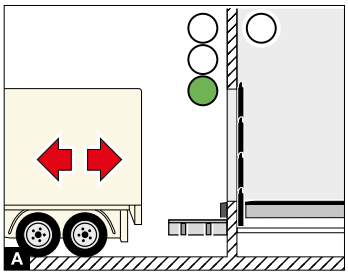

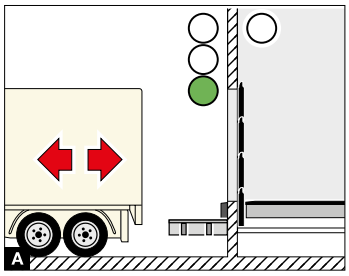

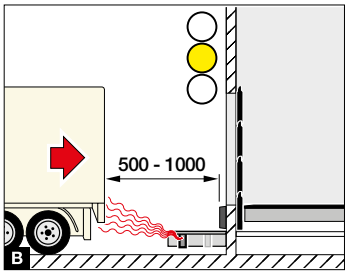

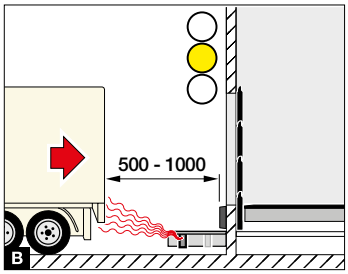

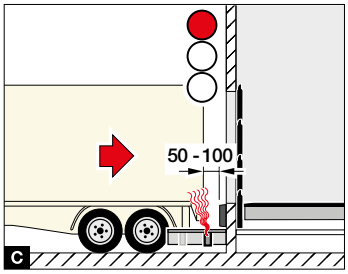

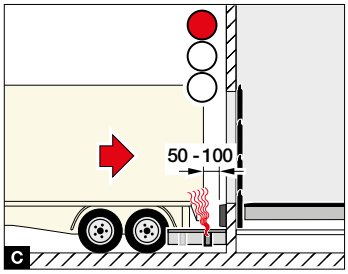

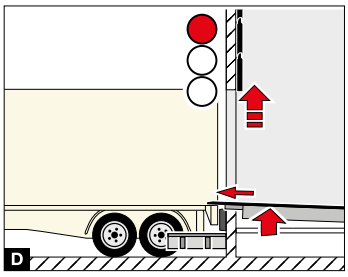

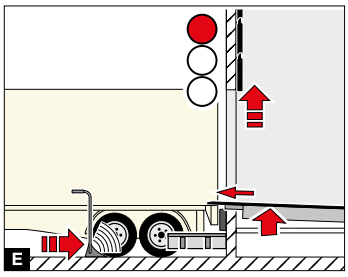

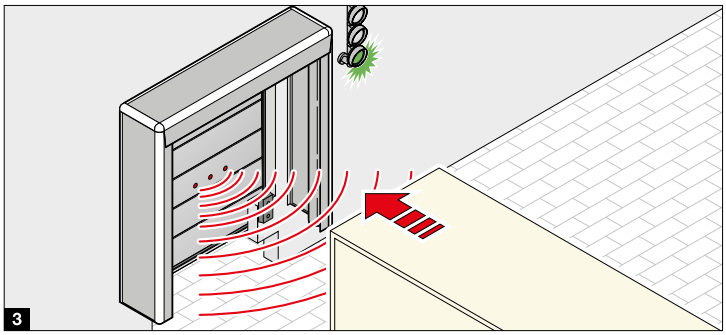

Wheel blocking

More workplace safety at the loading site

1

Secure docking position

The lip of a dock leveller must be in contact with at least 100 mm on the entire width of the lorry loading surface. A docked vehicle must therefore not leave its position during the entire loading process. However, driving and braking movements of industrial trucks can cause the lorry to unintentionally move away from its docking position. Applying the brakes on the lorry does not provide any protection against this so-called “creeping”.

Manual wheel-blocking system MWB2 1

The MWB2 wheel-blocking system reliably prevents a lorry from moving away unintentionally. The MWB2 has a working range of 2825 mm and can therefore be used for all standard vehicles. The blocking height is selected in such a way that wheel housings and lorry fairings cannot be damaged during locking. The construction is extremely robust and long-lasting. A concrete block protects against impact damage and the blocking mechanism withstands pull-out forces of up to 115 kN. In addition, the fitting of the largely pre-assembled MWB2 is simple and, with its adjustment facility, allows height compensation of up to 50 mm.

Simple, intuitive operation

After the docking operation, the driver guides the wheel-blocking system up to the tyre A. With a 90-degree turn, the blocking arm is moved out B and pulled against the tyre until it locks. The indicator light on the carriage confirms correct locking to the driver only when direct contact has been made with the tyre C. This avoids false security. The indicator light on the control informs the hall personnel: safe loading is now possible. Accidental release during the loading process is reliably prevented by an electronic mechanism.

After loading, the warning light outside tells the driver that they may release the vehicle. This can be achieved effortlessly even with strong pressure on the blocking arm, e.g. when the lorry is fully loaded. The travel path is clear again once the blocking arm has been folded in. The wheel-blocking system does not first have to be moved into a specific end-of-travel position. This saves time and prevents damage being caused by the lorry moving away too soon.

Low maintenance

The MWB2 has only a small number of wear parts and is therefore particularly easy to maintain. Service activities are supported via a mobile website with a Wi-Fi connection.

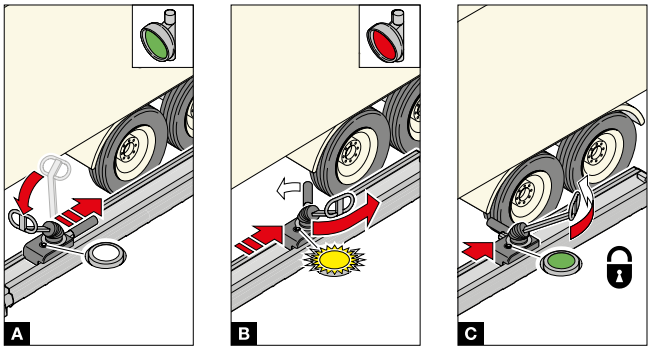

Standard control 2

The control unit is compatible and combinable with Hörmann controls for doors and dock levellers. A 24 V red / yellow / green warning light (1-light) is required outside. On request, the MWB2 can be supplied with a pre-wired warning light on a post. A piezo signal generator for a warning signal in case of malfunctions, an indicator lamp and a key switch are integrated into the control.
For an extended range of functions, e.g. the combination with a docking assistance system, an inflatable dock seal and warning lights, the standard control can be connected to the 560 S / T / V dock leveller controls. A direct connection to the MWBC control is also possible. Further information can be found starting on page 99.

Wheel chocks

Wheel chocks are the easiest way of securing the lorry against rolling away. Type WR 1 is equipped with a 7 m long chain and a wall holder for storage. Type WRH 2 also has an operating lever for easier handling.
For anyone who wants to ensure that the wheel chock is used properly, we recommend the version with a WSPG 3 sensor. A sensor visually monitors contact with the tyre and prevents operation of the dock leveller without contact. An integrated position sensor additionally ensures that the wheel chock only emits the signal “lorry secured” if its base rests on the ground. The electronics are well protected against mechanical damage.
The connection is provided with strain relief.

The WSPG can be connected in a variety of ways as needed:

- to any Hörmann dock leveller control
- to an operator control
- to the MWBC control, with or without docking assistant DAP.

Manoeuvring guides

Targeted and safe docking

Manoeuvring guides

Manoeuvring guides assist the driver with centred docking at the loading site. Hörmann offers a wide range of options, such as wheel guides made of steel or the optical Lightguide manoeuvring guide. A high and long wheel guide generally offers maximum guidance. Depending on the local conditions, it may be useful to resort to a smaller version.

The straight wheel guide WSM 1 has a diameter of approx. 115 mm at a height of 220 mm.

The WBM 2 with a diameter of 170 mm, a height of 320 mm and 3 fixing points offers more stability and a longer service life. The curve guiding results in an entrance funnel. It is available in various lengths.

Where a low height is crucial, e.g. when simply parking and removing swap containers, the WBL 3 is the ideal choice, also in a curved version, but with a diameter of approx. 115 mm and a height of just 180 mm.

The Lightguide manoeuvring guide 4 uses energy-saving LED technology to aid the approach to the ramp even in the dark or when visibility is impaired by precipitation.

1

2

3

4

Light signals, lights, anti-collision bollards and collision guards

Protection for equipment and structural elements

1

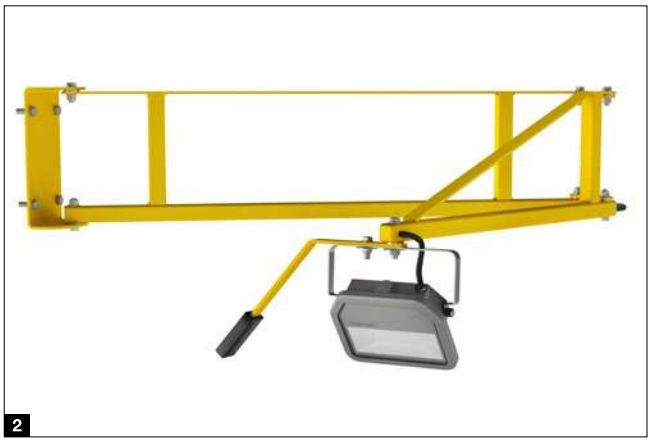

2

3

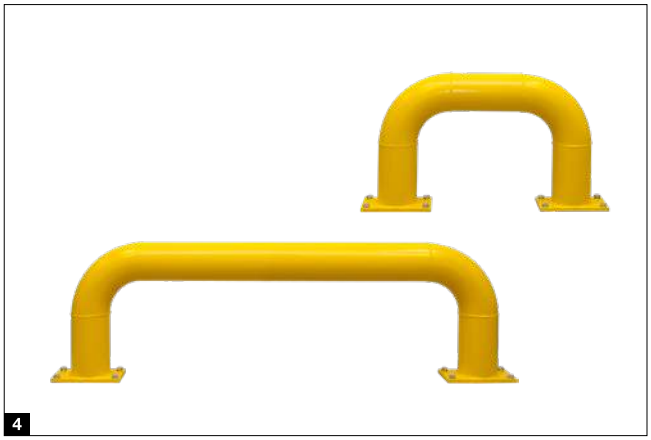

4

LED traffic lights 1

An additional optical control is provided by the combination with a signalling system. Hörmann LED traffic lights are energy-efficient, extremely durable and easily recognisable even in direct sunlight. Fitted outside, depending on the system drivers can quickly see whether they have reached the docking position or whether the loading process is complete and can drive away safely. Warning lights can be combined as required with Hörmann door control units, the dock leveller control 460 S / T and docking assistance systems.

Docklight 2

Docklights provide a safe and bright work environment and good illumination of the loading area, even at night. We recommend the energy-saving LED docklight DL 1400 with 30 W power consumption for a good and even illumination.

Anti-collision bollards 3

The extremely robust bollards made of galvanized steel protect door systems, machines and buildings from collision damage at certain points. They are used indoors and outdoors, on both sides of a loading site for example, to protect the door frame during the loading process.

Collision guards 4

For protecting the area near doors, machinery, racks and buildings indoors and outdoors, in the parking area of fire sliding doors for example, we recommend the heavy-duty collision guards. Thanks to the galvanized steel painted in Rapeseed yellow RAL 1021, the guards offer very good crash protection and have the effect of an optical warning.

Everything from a single source for construction and industry

Our large product range offers the right solution for any requirement. All products are optimally adjusted to work together, ensuring high functional safety. This makes us a strong, future-oriented partner for industrial and public construction projects.

INDUSTRIAL DOORS. LOADING TECHNOLOGY. SLIDING DOORS. CONSTRUCTION PROJECT DOORS. PERIMETER PROTECTION SYSTEMS.

Some of the products shown are equipped with special equipment and do not always correspond to the standard versions. The surface finishes and colours shown are subject to the limitations of the printing process and cannot be regarded as binding. All rights reserved. No part may be reproduced without our prior permission. Subject to changes.

Issue 12.2023 / Print 03.2024 / HF 86278 EN-UK / SAP 368783 / PDF / Printed on 100% recycled paper

HÖRMANN